KOVALCHICK

CONVENTION AND ATHLETIC COMPLEX

INDIANA UNIVERSITY OF PENNSYLVANIA

SIGNAGE AND GRAPHICS CONSTRUCTION DOCUMENTS

PROJECT NUMBER 1004.05

ISSUED FOR BID 09/15/10

KMA DESIGN

135 TECHNOLOGY DRIVE, SUITE 401 CANONSBURG, PA 15317

TEL 724.745.8601 FAX 724.745.8607 WWW.THEKMAGROUP.COM

IUP™ CRIMSON HAWKS

FONTS

Abcdefghijklmnopqrstuvwxyz
1234567890

CORBEL REGULAR
TITLE CASE

ABCDEFGHIJKLMNOPQRSTUVWXYZ
1234567890

TRAJAN PRO BOLD
UPPER CASE

Abcdefghijklmnopqrstuvwxyz
1234567890

STUDIO NORMAL
TITLE CASE

Abcdefghijklmnopqrstuvwxyz
1234567890

HELVETICA BOLD
TITLE CASE

Abcdefghijklmnopqrstuvwxyz
1234567890

HELVETICA LIGHT
TITLE CASE

SHEET INDEX

SHEET	SIGN TYPE	DRAWING TITLE
LP01		LOCATION PLAN
LP02		LOCATION PLAN
LP03		LOCATION PLAN
LP04		LOCATION PLAN
01	01/02	OVERHEAD DIREDTIONAL/SECTION I.D.
02	03/04	RAIL/PORTAL MOUNT SECTION I.D.
03	06	WALL-MOUNT SECTION I.D.
04	07	WALL-MOUNT SECTION I.D. (IN BOWL)
05	08	DIRECTORY
06	09	WALL-MOUNT DIRECTIONAL
07	10	WALL-MOUNT DIRECTIONAL
08	11	DEPARTMENT I.D.
09	12	ROOM SIGN DONOR CLIP
09.1	12.1	DONOR PLAQUE
10	13	DONOR REC. CUT-OUT LETTERS
11	22/23	INTERIOR BANNERS
12	13.1	BOX OFFICE I.D.
13	16	WALL-MOUNT CRIMSON HAWK LOGO
14	26	DONOR/ATHLETIC ENDOWMENTS WALL
15	25	MAIN STAIRCASE SUPERGRAPHICS
16	19/20	ATHLETIC ADMIN AREA GRAPHICS
17	17/17.1	HALL OF FAME WALL
18	24	WINDOW SUPER GRAPHIC
19	15/18	STAIRWELL SUPER GRAPHIC/TROPHY CASE GRAPHIC
20	S6/S9	EXTERIOR DIRECTIONAL/DROP OFF I.D.
21	S1/S5	LOADING DOCK NUMBERS/CLEARANCE LETTERS
22	S2	FACILITY RULES
23	S3	GATE/ENTRANCE IDENTIFICATION
24	S7	OFF PREMISES DIRECTIONAL
25	S8A-S8I	D.O.T. POLE
26	S11	EXTERIOR BANNERS
27	14	FLAG SIGN FACE REPLACEMENT
28	27	DOOR VINYL
29	13/16/26	ARCHITECTURAL ELEVATIONS - MAIN LOBBY
30	21	BOX OFFICE SCROLLING LED I.D.

MATERIAL LIST

1. 1/2" PVC PAINTED TO MATCH AKZO NOBEL #352-A12 & PMS 201 EDGES TO MATCH 201
2. ORACAL 352 PRINT POLYESTER FILM 001 CHROME
3. SCREENED WHITE
4. 1/2" POLISHED ACORN NUT
5. ORACAL 348 SCARLET RED
6. 1 1/2" SQUARE ALUMINUM TUBE PAINTED TO MATCH AKZO NOBEL
7. AIRPLANE CABLE
8. 1/8" BREAKFORMED ALUMINUM PAINTED TO MATCH AKZO NOBEL #352-A12 & PMS 201
9. SURFACE SCREENED 201
10. 1/2" ACRYLIC PAINTED TO MATCH AKZO NOBEL #352-A12 & PMS 201
11. MOUNTING STUD
12. 1/8" ALUMINUM PAINTED TO MATCH PMS 201
13. 1/8" POLISHED ALUMINUM CABINET DETAIL
14. 1/2" PUSH THROUGH CLEAR ACRYLIC WITH ETCHMARK VINYL ON FACE
15. 1/2" PUSH THROUGH CLEAR ACRYLIC WITH ORACAL 348 SCARLET RED VINYL ON FACE
16. 1/8" ALUMINUM PAINTED TO MATCH AKZO NOBEL #352-A12
17. 1/2 PUSH THROUGH FROSTED ACRYLIC
18. BRIGHT WHITE LED
19. ELECTRICAL BY OTHERS
20. SURFACE SCREENED LOGO TO MATCH PMS BLACK & PMS 201
21. 1/32" RAISED COPY PAINTED TO MATCH PMS 201
22. RAISED TYPE II BRAILLE
23. 1/4" FROSTED ACRYLIC
24. SURFACE SCREENED COPY TO MATCH PMS 201
25. HIGH BOND ADHESIVE TAPE
26. 1/4" ACRYLIC PAINTED TO MATCH PMS 201
27. SKRIM BANNER (FULL COLOR)
28. 1/2" BLACK SINTRA WITH SURFACE APPLIED DIGITAL PRINT
29. FOAM TAPE / SILICONE
30. SENTITILE LUMINA PANEL
31. 1/8" ALUMINUM FRAME PAINTED TO MATCH AKZO NOBEL #352-A12
32. SECOND SURFACE VINYL (COLOR T.B.D.)
33. KORO GRAPHICS GLASSED #0021 FULL COLOR WALL COVERING (OR EQUIVALENT)
34. 1/2" CLEAR SCRATCH RESISTANT ACRYLIC WITH POLISHED EDGES
35. SECOND SURFACE WHITE VINYL
36. 1/8" BRUSHED ALUMINUM
37. 1" SATIN FINISH STAND-OFF
38. 1/2" ALUMINUM SPACER
39. PERFORATED WINDOW FILM FOR FULL COLOR GRAPHIC
40. 1/8" ALUMINUM PAINTED TO MATCH AKZO NOBEL #352-A12 & PMS 201
41. 1/8" LOGO PAINTED TO MATCH PMS 201 & WHITE
42. CABINET TO MATCH BUILDING SKIRTING
43. ALUMINUM CABINET PAINTED TO MATCH PMS 201
44. REFLECTIVE WHITE VINYL
45. 1/4" ACRYLIC PAINTED TO MATCH AKZO NOBEL #352-A12 & PMS 201
46. 1/8" CLEAR ACRYLIC WITH SECOND SURFACE GRAPHICS
47. 1/2" ALUMINUM PAINTED TO MATCH PMS 201
48. 1/2" ALUMINUM PAINTED TO MATCH AKZO NOBEL #352-A12
49. 1/16" ALUMINUM PAINTED TO MATCH AKZO NOBEL #352-A12 & PMS 201
50. REFLECTIVE RED VINYL TO MATCH PMS 201
51. U-CHANNEL D.O.T. MOUNTING POLE
52. 4" O.D. POLE PAINTED BLACK
53. 5" O.D. POLE RING DETAIL PAINTED TO MATCH PMS 201
54. 1/2" SATIN FINISH STAND-OFF
55. 1/4" CLEAR ACRYLIC WITH POLISHED EDGES
56. SECOND SURFACE ETCH MARK VINYL
57. 1/4" ACRYLIC PAINTED TO MATCH PMS 201
58. BETA-BRITE ELECTRONIC MESSAGE DISPLAY CENTER

LOGOS

COLORS

PMS 201 C

PMS 289 C
90% VALUE

AKZO NOBEL
SILVER - #352, A12

INTERIOR LOCATION PLAN LEGEND

LEVEL — SIGN NUMBER

1-7-01

SIGN TYPE

EXTERIOR LOCATION PLAN LEGEND

SIGN NUMBER

S-7-01

SIGN TYPE

DRAWN BY	CHECKED BY
MRM 09-15-10	BJM 09-15-10

ISSUED FOR / DATE

CONSTRUCTION DOCUMENTS 09-15-10

GENERAL NOTES

GENERAL NOTES:

01. WRITTEN DIMENSIONS ON DRAWINGS TAKE PRECEDENCE OVER SCALED DIMENSIONS. SIGN CONTRACTOR SHALL VERIFY AND BE RESPONSIBLE FOR ALL DIMENSIONS AND CONDITIONS SHOWN ON DRAWINGS. VERIFY PRIOR TO SUBMITTING SHOP DRAWINGS
02. ALL SIGNS ARE TO COMPLY WITH ADA ACCESSIBILITY GUIDELINES FOR BUILDING AND FACILITIES, SIGNAGE CHAPTER 7 AND OTHER APPLICABLE CODES.
03. THE SIGN CONTRACTOR SHALL SUBMIT LAYOUT FOR ALL ALTERNATE MESSAGES – THOSE INDICATED IN MESSAGE SCHEDULE AND NOT APPEARING IN THIS DOCUMENT SET – TO BE REVIEWED DURING THE SHOP DRAWING SUBMITTAL.
04. SIGN CONTRACTOR SHALL VERIFY ALL EXISTING CONDITIONS PRIOR TO SHOP DRAWINGS AND BRING ANY DISCREPANCY BETWEEN THE DRAWING AND THE ACTUAL CONDITION TO THE OWNER'S ATTENTION PRIOR TO FABRICATION.
05. THE SIGN CONTRACTOR SHALL PROVIDE ENGINEERED DESIGN FOR ALL SIGNS REQUIRING FOOTINGS, STRUCTURAL AND ELECTRICAL CONNECTIONS. THESE ENGINEERED CONNECTIONS SHALL BE SUBMITTED WITH THE SHOP DRAWINGS AND STAMPED BY AN ENGINEER REGISTERED LOCALLY.
06. ALL COLORS AND FINISHES SHALL BE APPROVED BY THE OWNER PRIOR TO THE PRODUCTION OF SIGN UNITS.
07. CONTRACTOR SHALL APPLY FOR AND OBTAIN SIGN PERMITS FOR ALL SIGNS PRIOR TO FABRICATION AND INSTALLATION OF SIGN UNITS.
08. SIGN CONTRACTOR SHALL PROVIDE FULL SIZE MOCK-UPS OF DESIGNATED SIGN TYPES AS NOTED IN THE SPECIFICATIONS FOR OWNER APPROVAL BEFORE PROCEEDING WITH SIGN FABRICATION AND INSTALLATION.
09. PAINT / COLORS / MATERIALS SHOWN IN DRAWINGS SHALL BE CONTINUOUS AROUND EDGES AND ALL CONTINUOUS FACES.
10. WHEN DISTURBANCE OF FINISHED SURFACES IS REQUIRED FOR THE INSTALLATION OF SIGNS, CONTRACTOR SHALL REPAIR AND RESTORE THE DISRUPTED SURFACE TO ITS ORIGINAL CONDITION.
11. TYPEFACES SHALL NOT BE SUPPLIED TO CONTRACTOR. CONTRACTOR SHALL OBTAIN THE LICENSED EDITION FOR THEIR OWN USE.
12. SIGN TYPE S5.1, S5.2, S5.3 - FABRICATOR TO FIELD VERIFY MOUNTING HARDWARE

DRAWING TITLE

GENERAL NOTES

OWNER

INDIANA UNIVERSITY OF PENNSYLVANIA
INDIANA, PA

APPROVAL / DATE

___-___-___ _____

PROJECT NUMBER

1004.05

SIGN TYPE	SHEET NO.
GN	GN

KMA DESIGN
135 TECHNOLOGY DRIVE, SUITE 401 - CANONSBURG, PA 15317 VOICE 724.745.8601 FAX 724.745.8607 WWW.THEKMAGROUP.COM

© 2010 KMA DESIGN

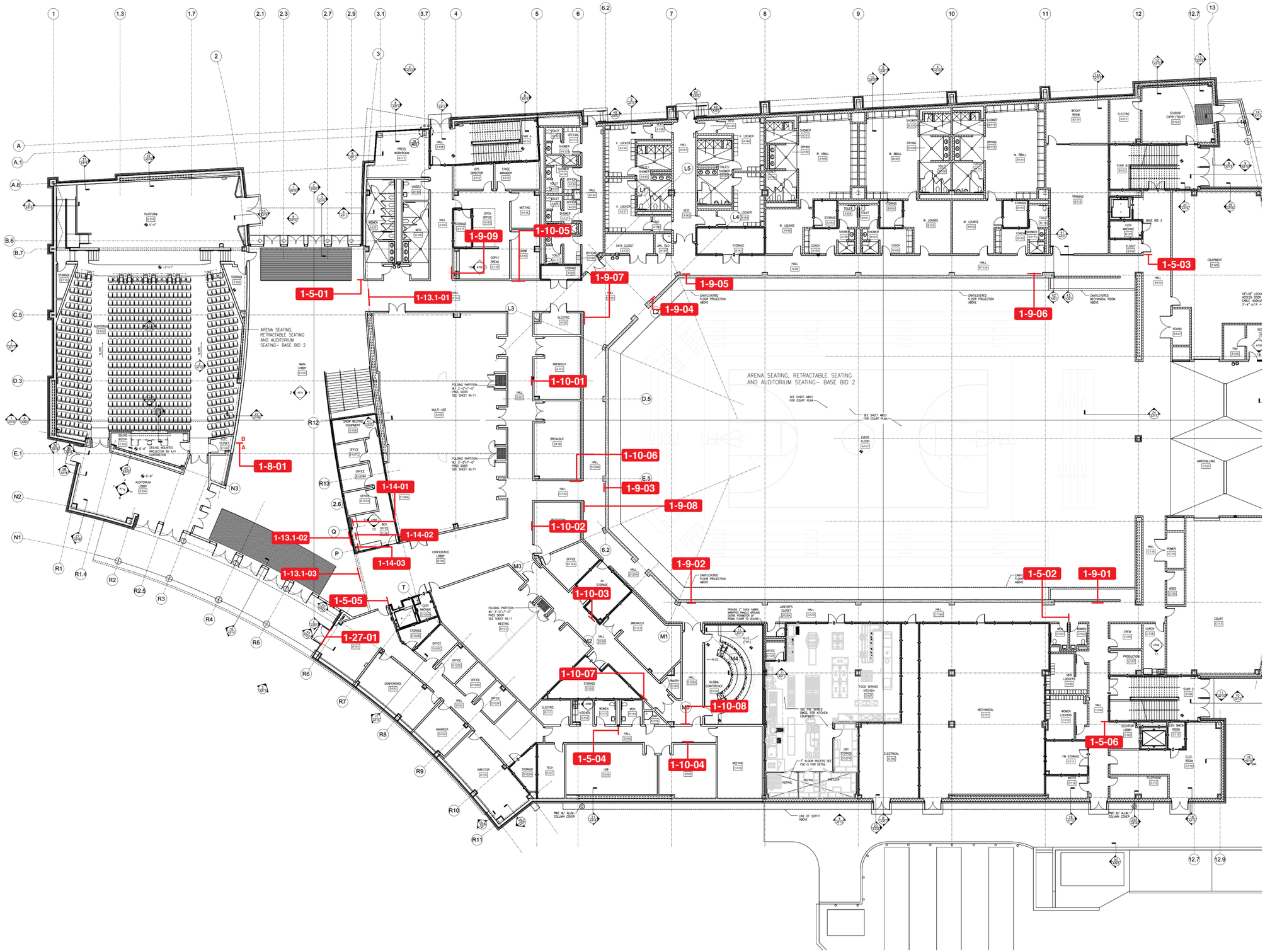

DRAWN BY	CHECKED BY
MRM 08-24-10	JGE 08-24-10

ISSUED FOR / DATE

100% Construction Documents 09-01-10

REVISION NUMBER

DRAWING TITLE

EVENT LEVEL LOCATION PLAN

NOTES

OWNER

INDIANA UNIVERSITY OF PENNSYLVANIA
INDIANA, PA

APPROVAL / DATE

___-___-___ _____

PROJECT NUMBER

1004.05

SIGN TYPE	SHEET NO.
LP	LP01

KMA DESIGN
135 TECHNOLOGY DRIVE, SUITE 401 - CANONSBURG, PA 15317 VOICE 724.745.8601 FAX 724.745.8607 WWW.THEKMAGROUP.COM

© 2010 KMA DESIGN

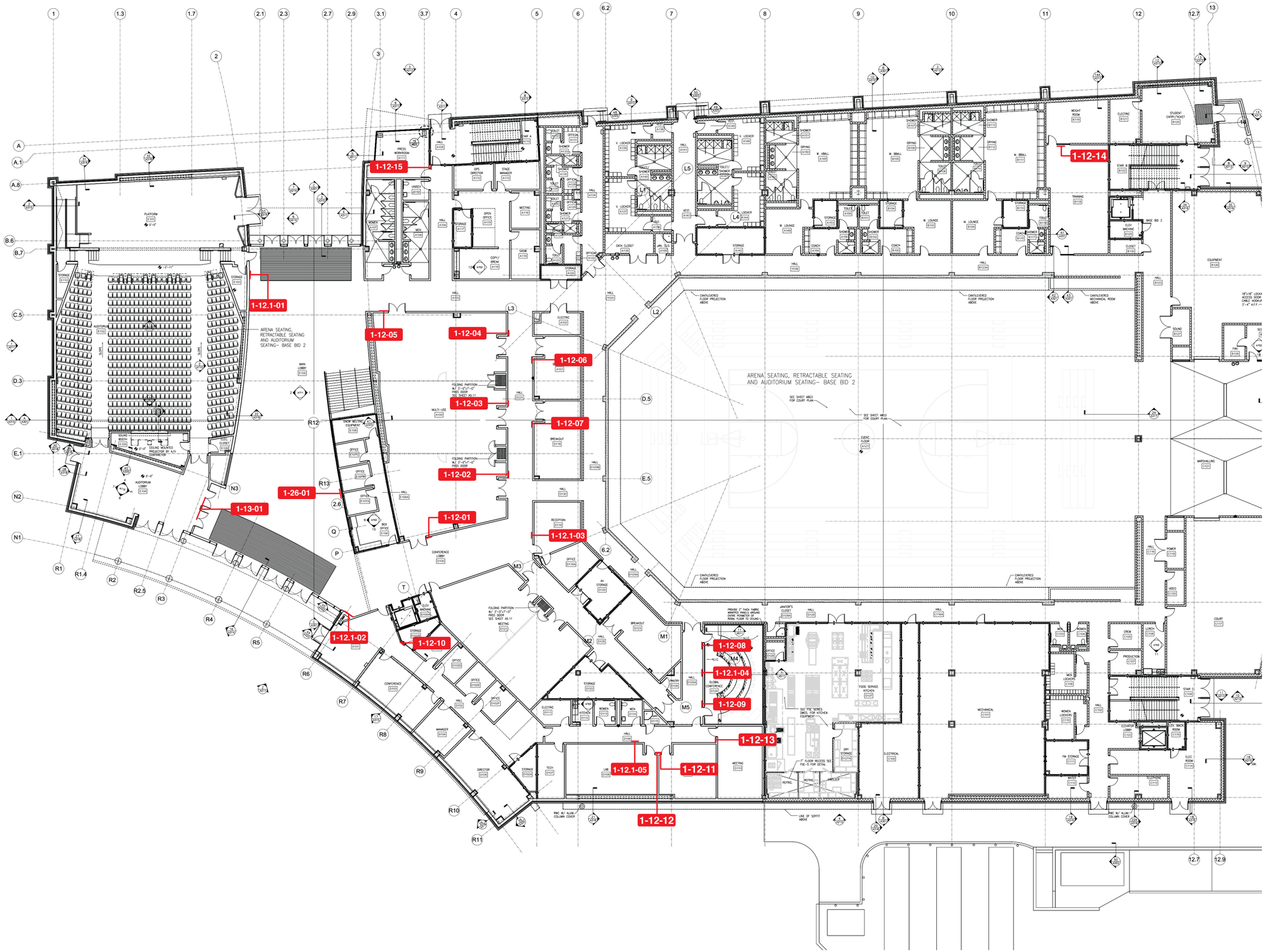

DRAWN BY	CHECKED BY
MRM 08-24-10	JGE 08-24-10

ISSUED FOR / DATE

100% Construction Documents 09-01-10

REVISION NUMBER

DRAWING TITLE

EVENT LEVEL LOCATION PLAN
DONOR RECOGNITION

NOTES

OWNER

INDIANA UNIVERSITY OF PENNSYLVANIA
INDIANA, PA

APPROVAL / DATE

___-___-___ _____

PROJECT NUMBER

1004.05

SIGN TYPE	SHEET NO.
LP	LP01.1

KMA DESIGN
135 TECHNOLOGY DRIVE, SUITE 401 - CANONSBURG, PA 15317 VOICE 724.745.8601 FAX 724.745.8607 WWW.THEKMAGROUP.COM

© 2010 KMA DESIGN

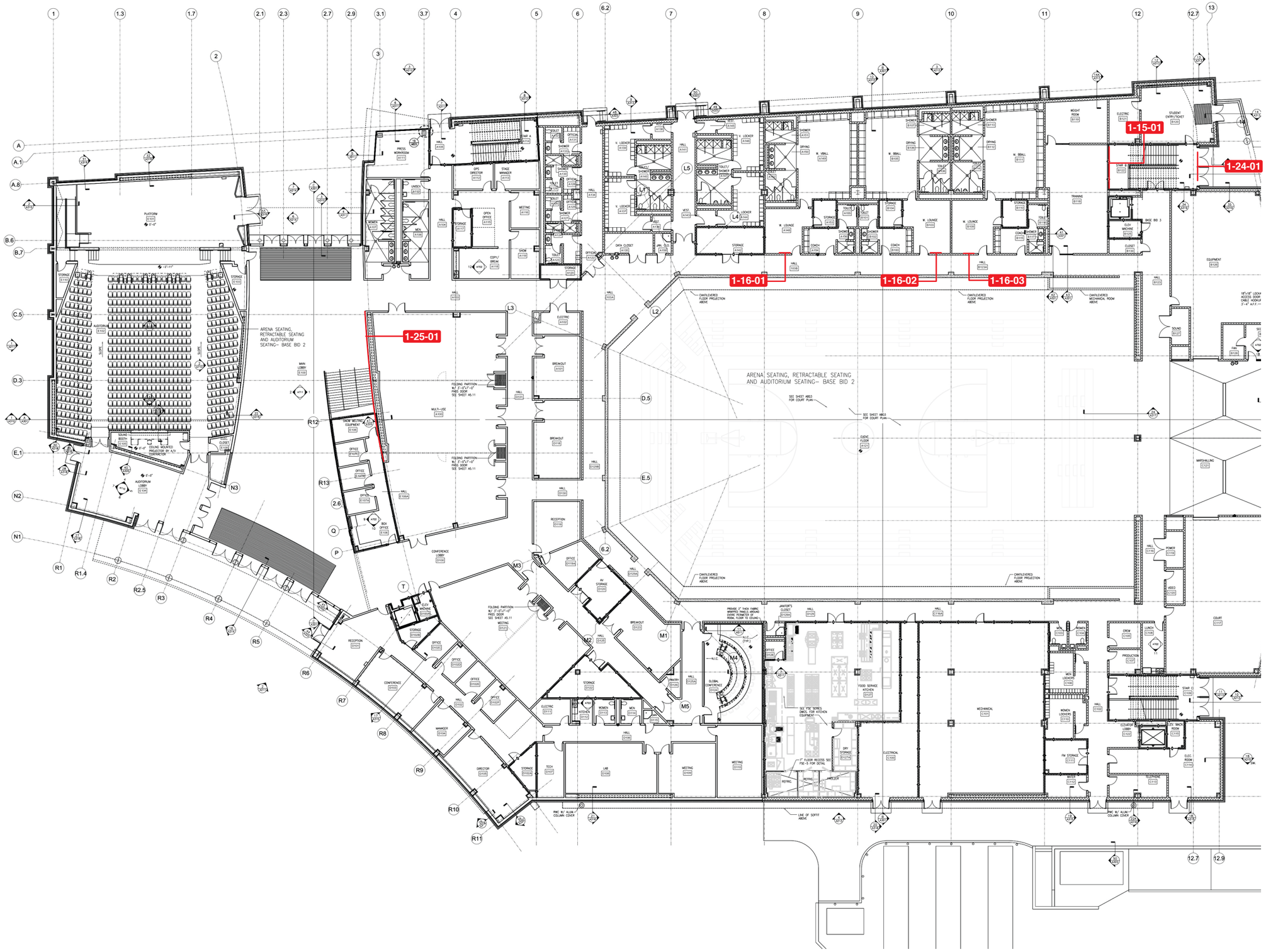

DRAWN BY	CHECKED BY
MRM 08-24-10	JGE 08-24-10

ISSUED FOR / DATE

100% Construction Documents 09-01-10

REVISION NUMBER

DRAWING TITLE

EVENT LEVEL LOCATION PLAN
SUPERGRAPHICS

NOTES

OWNER

INDIANA UNIVERSITY OF PENNSYLVANIA
INDIANA, PA

APPROVAL / DATE

___-___-___ _____

PROJECT NUMBER

1004.05

SIGN TYPE	SHEET NO.
LP	LP01.2

KMA DESIGN
135 TECHNOLOGY DRIVE, SUITE 401 - CANONSBURG, PA 15317 VOICE 724.745.8601 FAX 724.745.8607 WWW.THEKMAGROUP.COM

© 2010 KMA DESIGN

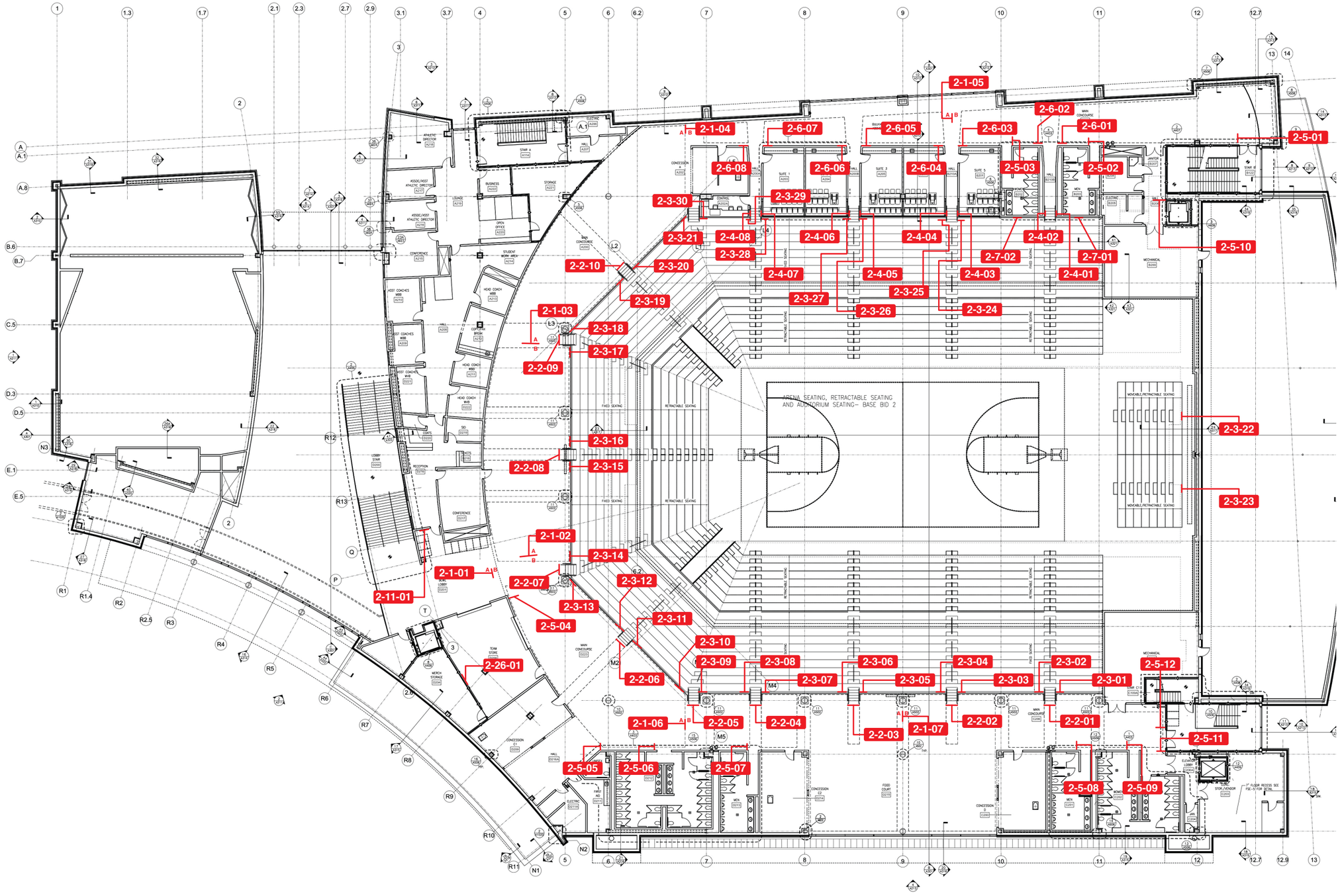

DRAWN BY	CHECKED BY
MRM 08-24-10	JGE 08-24-10

ISSUED FOR / DATE

100% Construction Documents 09-01-10

REVISION NUMBER

DRAWING TITLE

CONCOURSE LEVEL LOCATION PLAN

NOTES

OWNER

INDIANA UNIVERSITY OF PENNSYLVANIA
INDIANA, PA

APPROVAL / DATE

___-___-___ _____

PROJECT NUMBER

1004.05

SIGN TYPE	SHEET NO.
LP	LP02

KMA DESIGN
135 TECHNOLOGY DRIVE, SUITE 401 - CANONSBURG, PA 15317 VOICE 724.745.8601 FAX 724.745.8607 WWW.THEKMAGROUP.COM

© 2010 KMA DESIGN

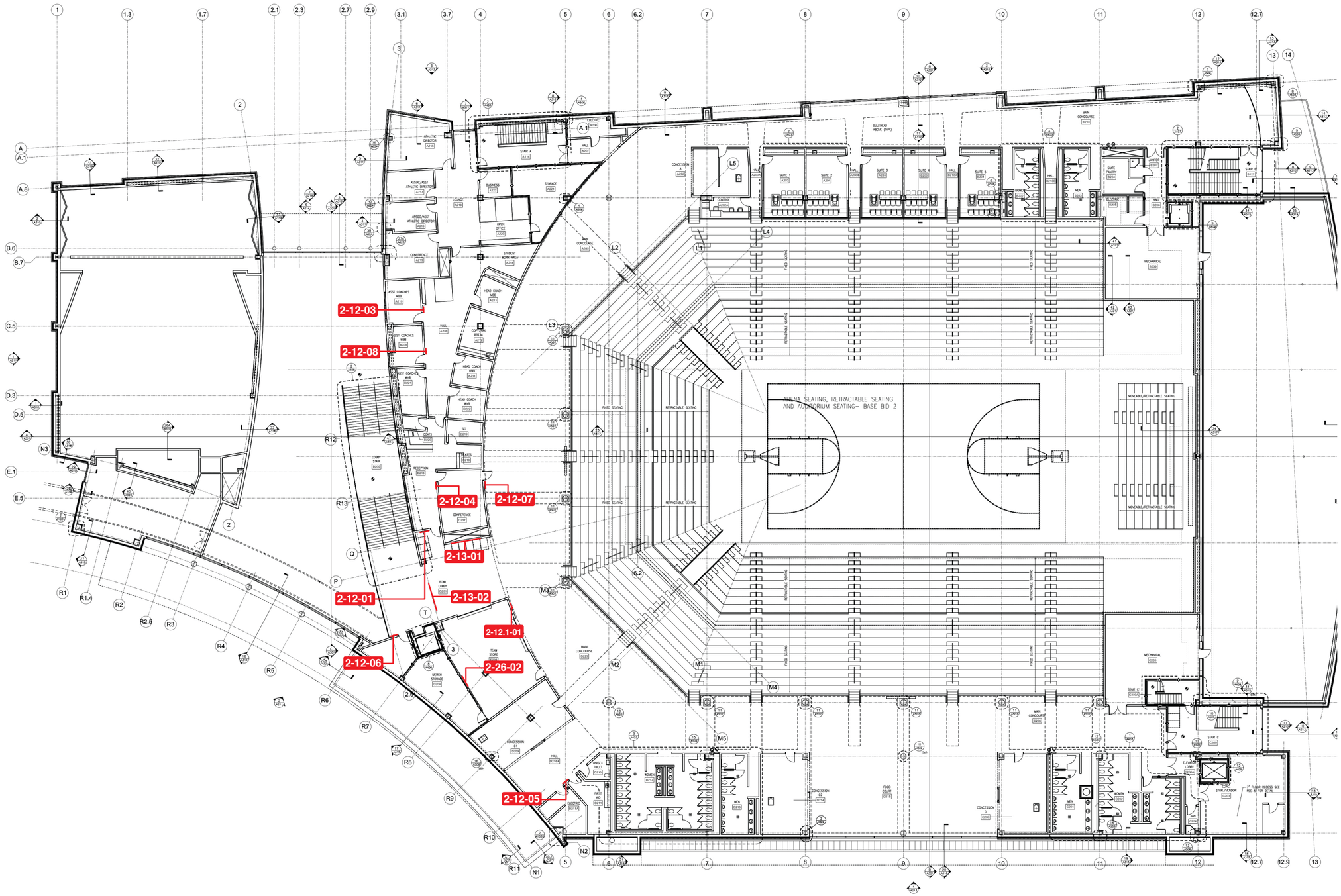

DRAWN BY	CHECKED BY
MRM 08-24-10	JGE 08-24-10

ISSUED FOR / DATE

100% Construction Documents 09-01-10

REVISION NUMBER

DRAWING TITLE

CONCOURSE LEVEL LOCATION PLAN
DONOR RECOGNITION

NOTES

OWNER

INDIANA UNIVERSITY OF PENNSYLVANIA
INDIANA, PA

APPROVAL / DATE

___-___-___ _____

PROJECT NUMBER

1004.05

SIGN TYPE	SHEET NO.
LP	LP02.1

KMA DESIGN
135 TECHNOLOGY DRIVE, SUITE 401 - CANONSBURG, PA 15317 VOICE 724.745.8601 FAX 724.745.8607 WWW.THEKMAGROUP.COM

© 2010 KMA DESIGN

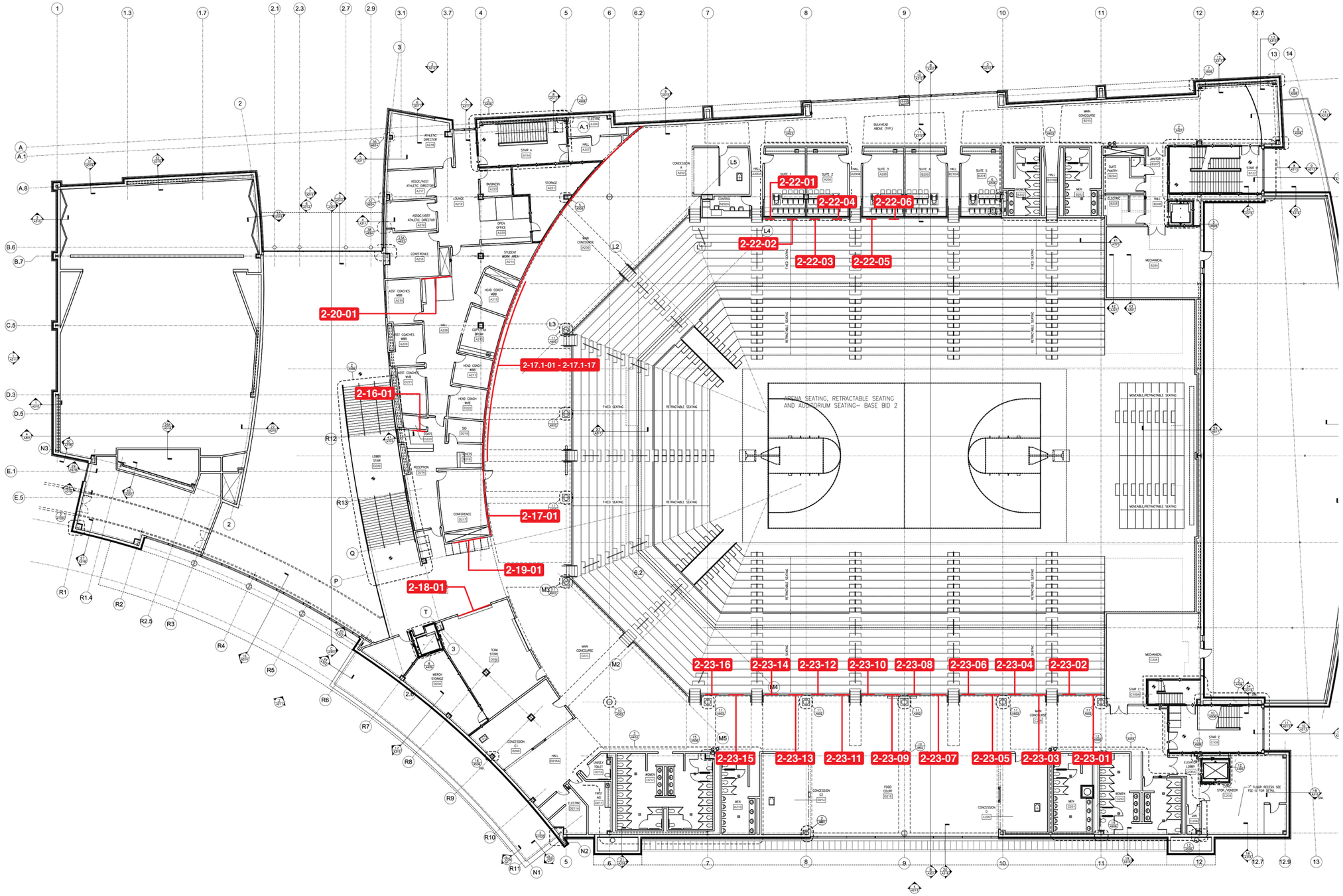

DRAWN BY	CHECKED BY
MRM 08-24-10	JGE 08-24-10

ISSUED FOR / DATE

100% Construction Documents 09-01-10

REVISION NUMBER

DRAWING TITLE

CONCOURSE LEVEL LOCATION PLAN
SUPER GRAPHICS

NOTES

OWNER

INDIANA UNIVERSITY OF PENNSYLVANIA
INDIANA, PA

APPROVAL / DATE

___-___-___ _____

PROJECT NUMBER

1004.05

SIGN TYPE	SHEET NO.
LP	LP02.2

KMA DESIGN
135 TECHNOLOGY DRIVE, SUITE 401 - CANONSBURG, PA 15317 VOICE 724.745.8601 FAX 724.745.8607 WWW.THEKMAGROUP.COM

© 2010 KMA DESIGN

MATCH LINE - SEE SHEET C230

SHEET INDEX MAP

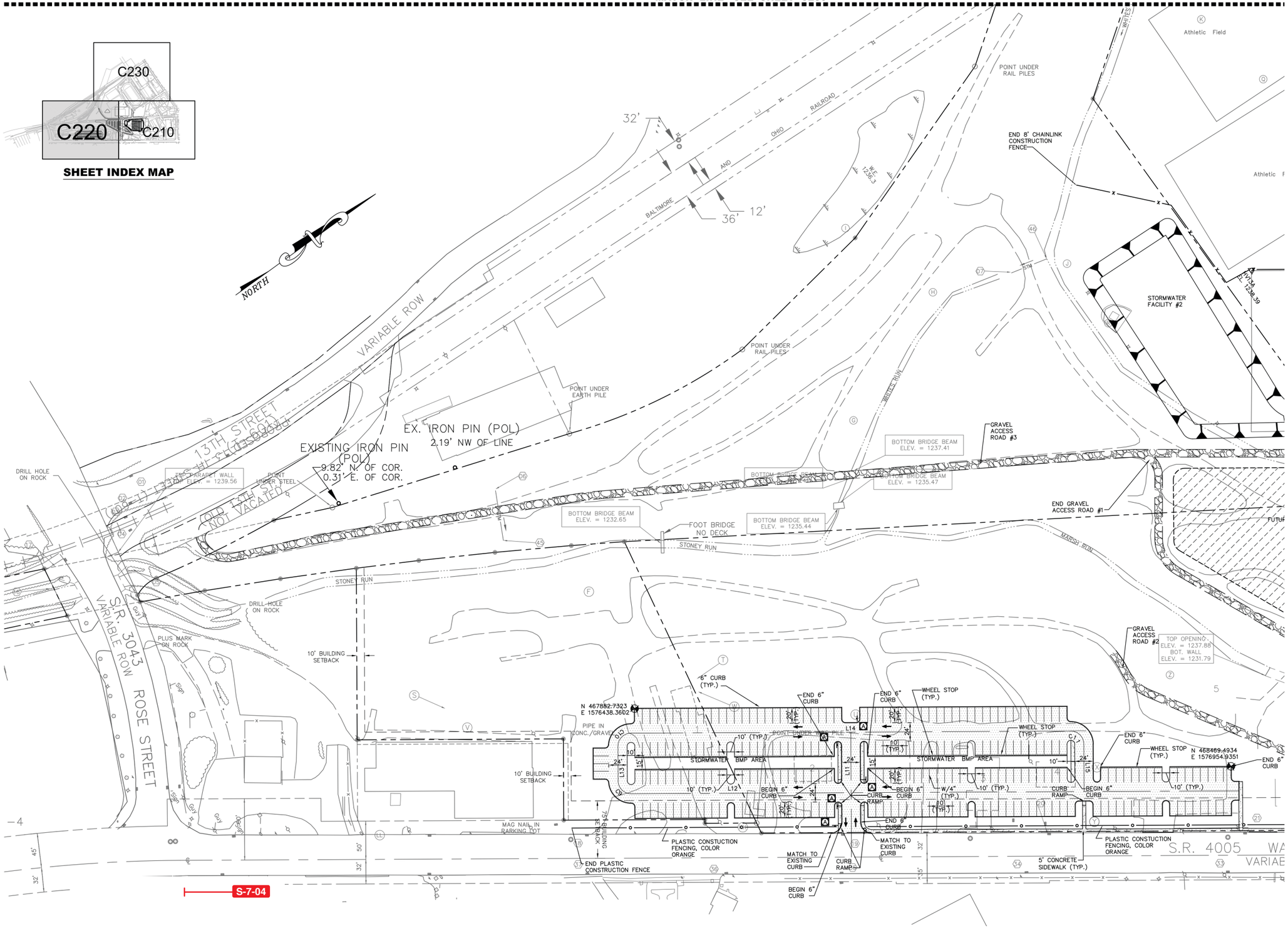

DRAWN BY	CHECKED BY
MRM 08-24-10	JGE 08-24-10

ISSUED FOR / DATE

100% Construction Documents 09-01-10

REVISION NUMBER

DRAWING TITLE

EXTERIOR LOCATION PLAN

NOTES

OWNER

INDIANA UNIVERSITY OF PENNSYLVANIA
INDIANA, PA

APPROVAL / DATE

___-___-___

PROJECT NUMBER

1004.05

SIGN TYPE	SHEET NO.
LP	LP03

KMA DESIGN
135 TECHNOLOGY DRIVE, SUITE 401 - CANONSBURG, PA 15317 VOICE 724.745.8601 FAX 724.745.8607 WWW.THEKMAGROUP.COM

© 2010 KMA DESIGN

20.dwg 5/27/2008 11:33:19 AM EDT

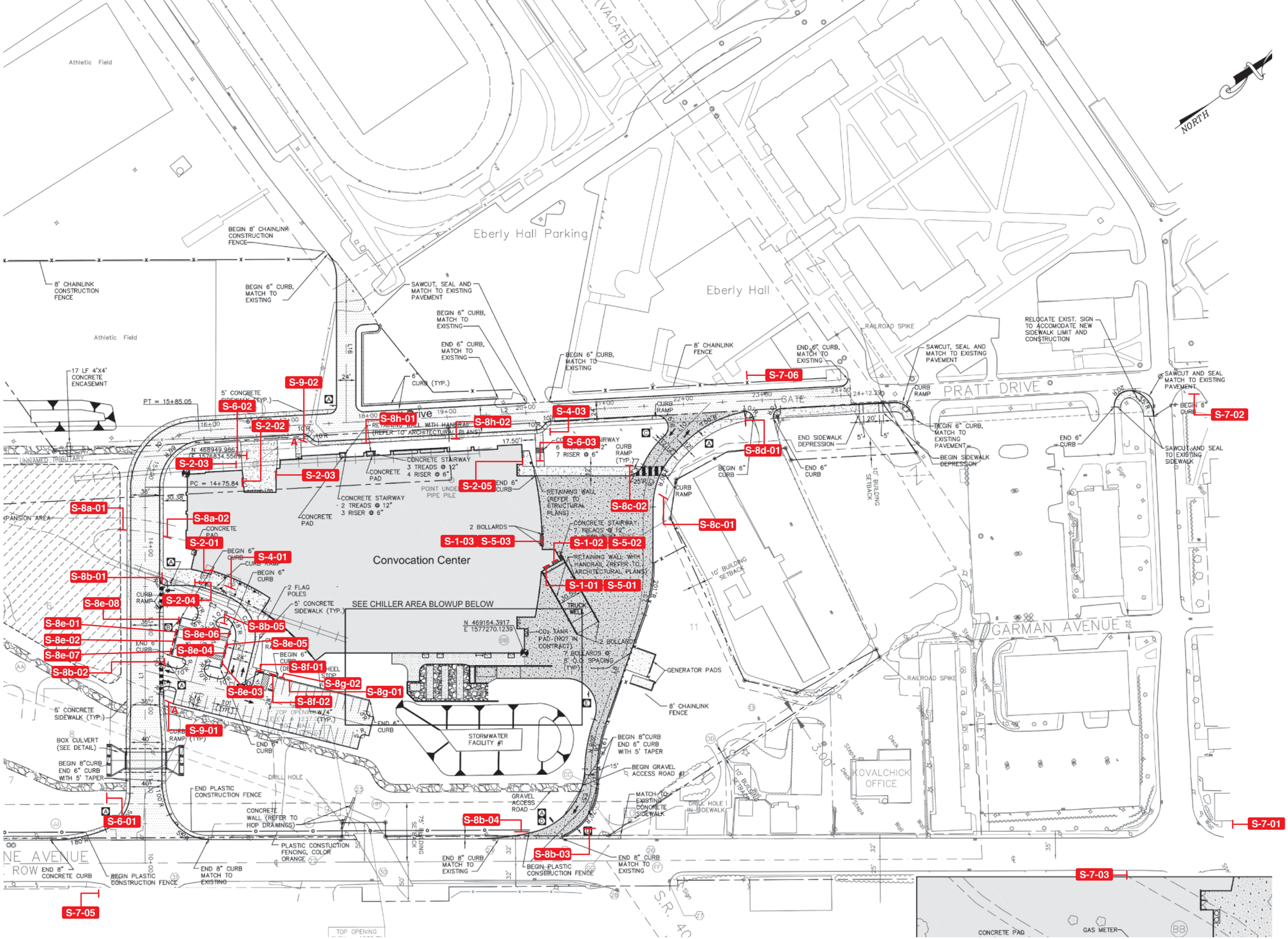

DRAWN BY	CHECKED BY
MRM 08-24-10	JGE 08-24-10

ISSUED FOR / DATE

100% Construction Documents 09-01-10

REVISION NUMBER

DRAWING TITLE

EXTERIOR LOCATION PLAN

NOTES

OWNER

INDIANA UNIVERSITY OF PENNSYLVANIA
INDIANA, PA

APPROVAL / DATE

___-___-___

PROJECT NUMBER

1004.05

SIGN TYPE	SHEET NO.
LP	LP04

KMA DESIGN
135 TECHNOLOGY DRIVE, SUITE 401 - CANONSBURG, PA 15317 VOICE 724.745.8601 FAX 724.745.8607 WWW.THEKMAGROUP.COM

© 2010 KMA DESIGN

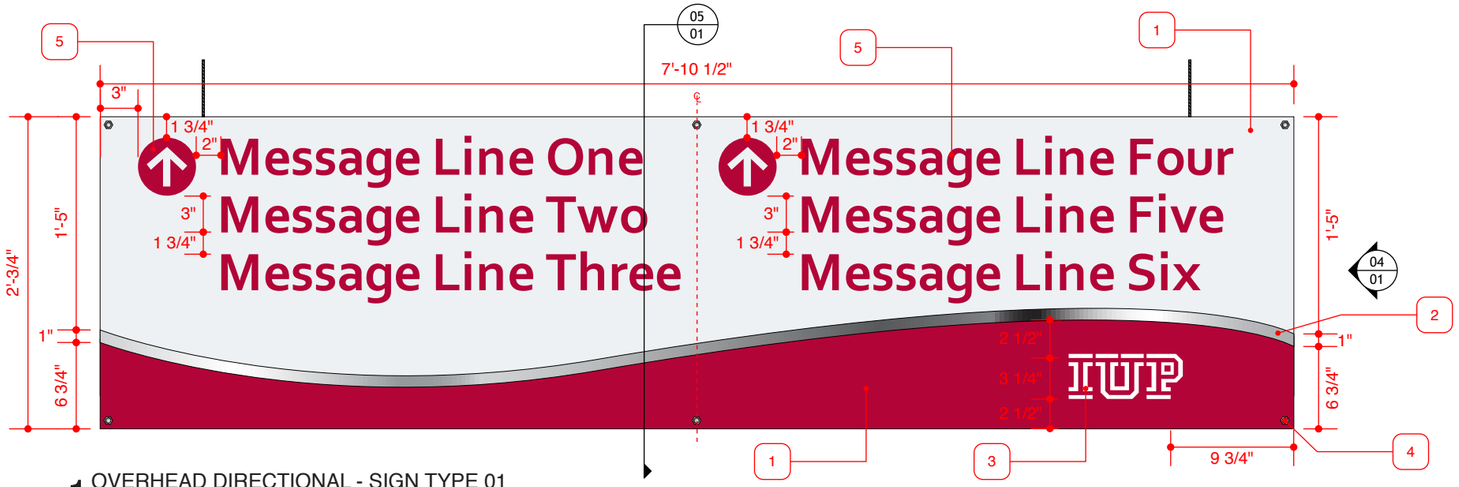

1 OVERHEAD DIRECTIONAL - SIGN TYPE 01
ELEVATION

SCALE: 1" = 1'-0"

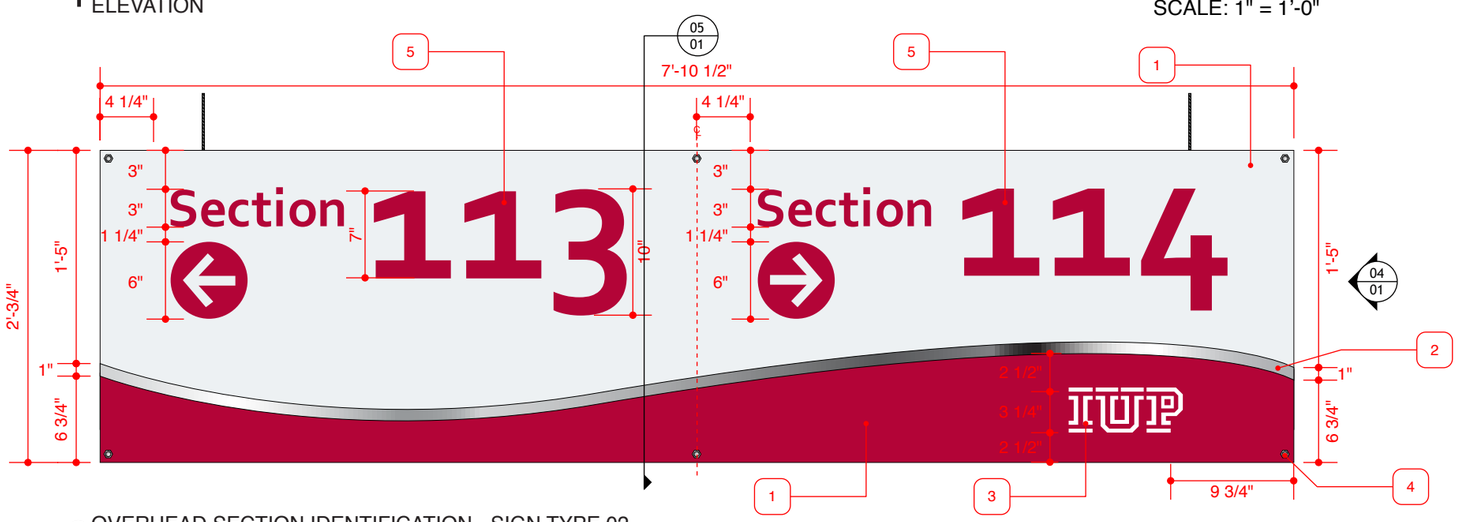

2 OVERHEAD SECTION IDENTIFICATION - SIGN TYPE 02
ELEVATION

SCALE: 1" = 1'-0"

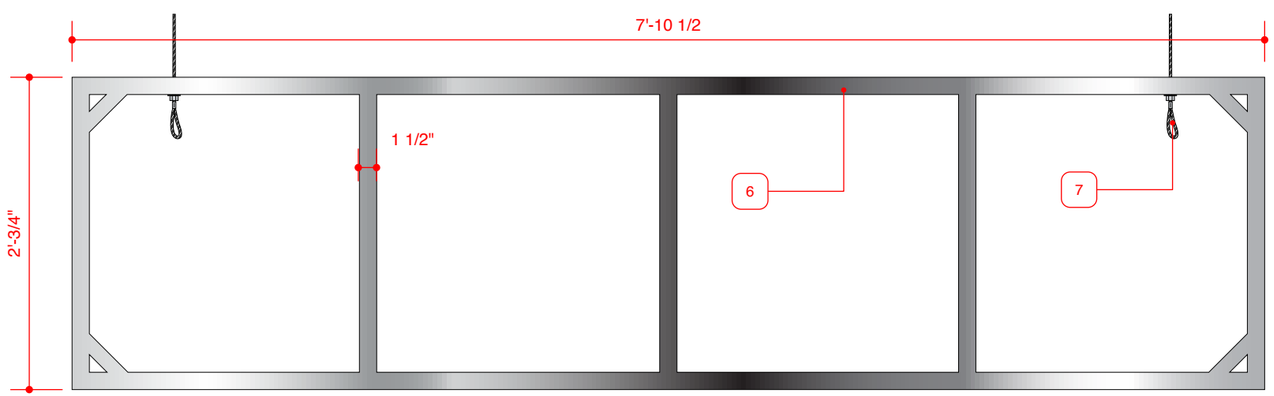

3 OVERHEAD DIRECTIONAL / SECTION I.D. - ALUMINUM MOUNTING FRAME
ELEVATION

SCALE: 1" = 1'-0"

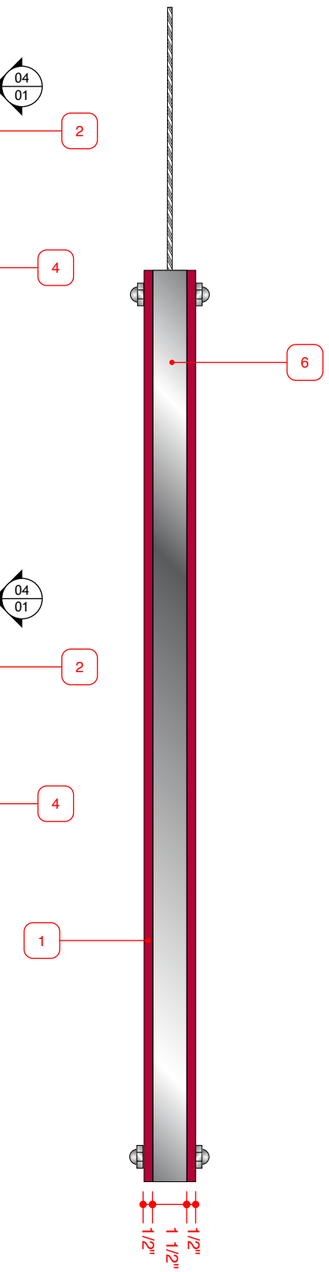

4 OVERHEAD DIRECTIONAL
END VIEW

SCALE: 2" = 1'-0"

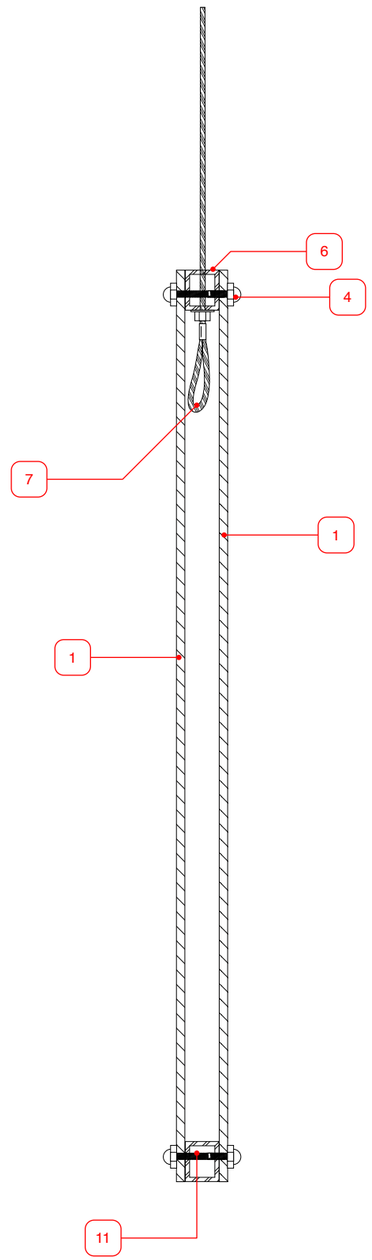

5 OVERHEAD DIRECTIONAL
SECTION

SCALE: 2" = 1'-0"

DRAWN BY	CHECKED BY
MICHAEL MARTIN	BARBARA MARTIN

ISSUED FOR / DATE

CONSTRUCTION DOCUMENTS 09-15-10

REVISION NUMBER

DRAWING TITLE

SIGN TYPE 01 - OVERHEAD DIRECTIONAL
SIGN TYPE 02 - OVERHEAD SECTION I.D.

NOTES

OWNER

INDIANA UNIVERSITY OF PENNSYLVANIA
INDIANA, PA

APPROVAL / DATE

___-___-___ _____

PROJECT NUMBER

1004.05

SIGN TYPE	SHEET NO.
01,02	01

KMA DESIGN
135 TECHNOLOGY DRIVE, SUITE 401 - CANONSBURG, PA 15317 VOICE 724.745.8601 FAX 724.745.8607 WWW.THEKMAGROUP.COM

©2010 KMA DESIGN

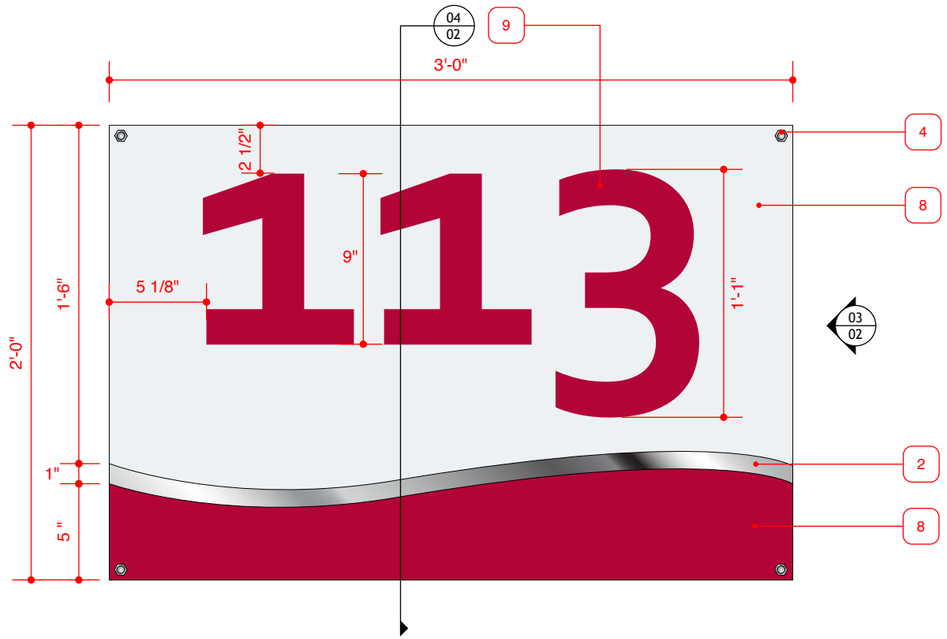

1 SIGN TYPE 03 - RAIL MOUNTED SECTION I.D.
ELEVATION

SCALE: 1 1/2" = 1'-0"

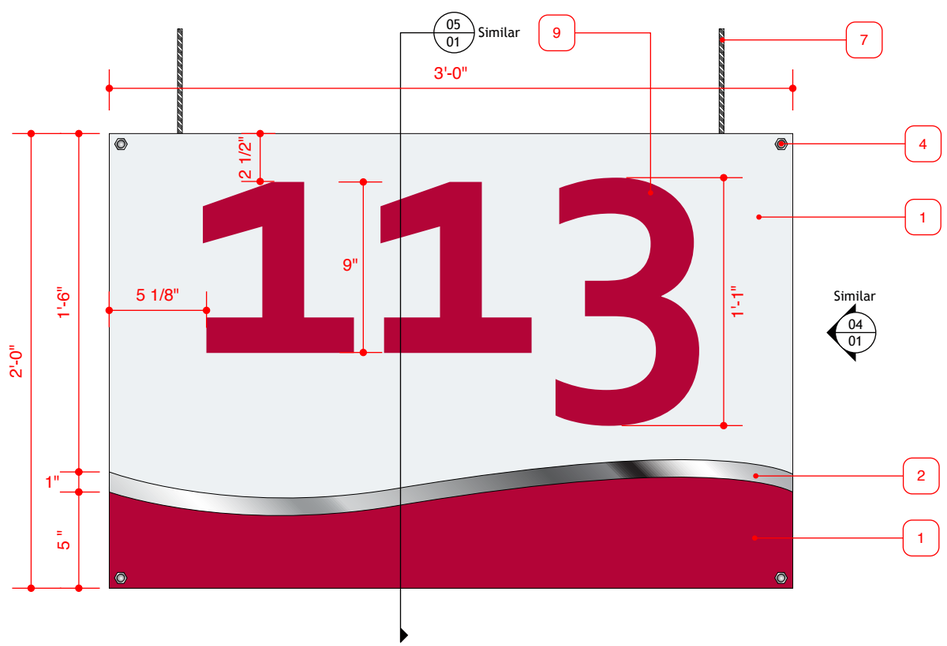

2 SIGN TYPE 04 - PORTAL ENTRY SECTION I.D.
ELEVATION

SCALE: 2" = 1'-0"

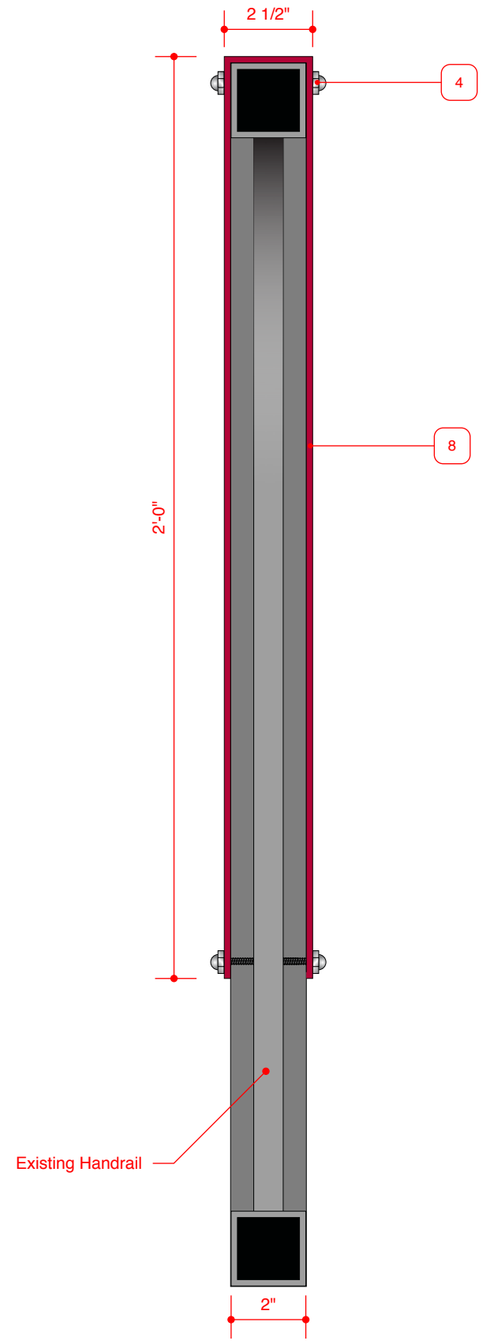

3 SIGN TYPE 03 - RAIL MOUNT
END VIEW

SCALE: 1/4" = 1"

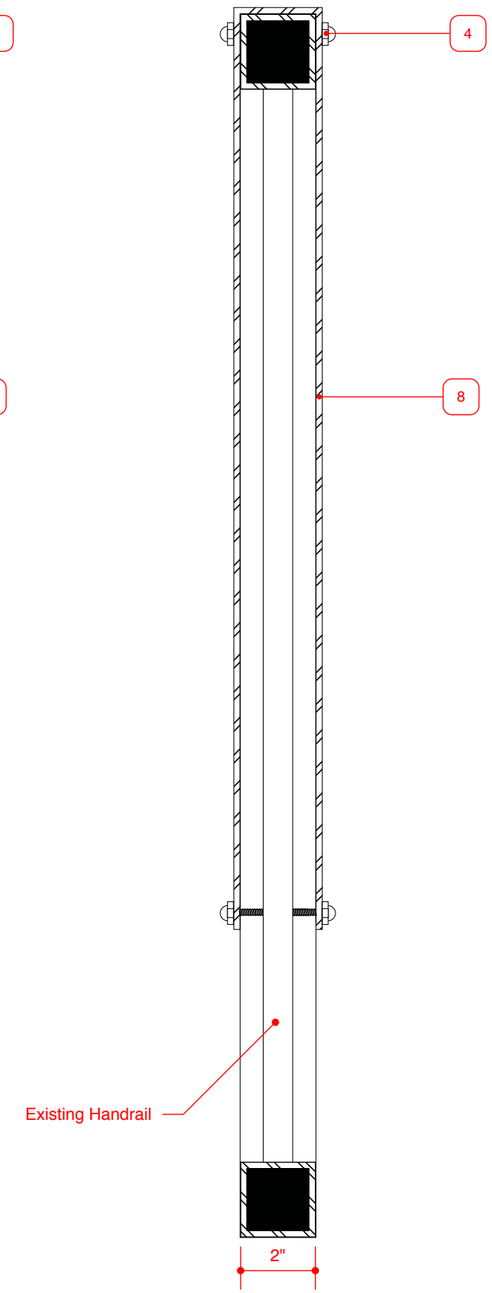

4 SIGN TYPE 03 - RAIL MOUNT
SECTION

SCALE: 1/4" = 1"

DRAWN BY	CHECKED BY
MICHAEL MARTIN	BARBARA MARTIN

ISSUED FOR / DATE

CONSTRUCTION DOCUMENTS 09-15-10

REVISION NUMBER

DRAWING TITLE

SIGN TYPE 03 - RAIL MOUNT SECTION I.D.
SIGN TYPE 04 - PORTAL SECTION I.D.

NOTES

FABRICATOR TO FIELD VERIFY HAND RAIL DIMENSIONS

OWNER

INDIANA UNIVERSITY OF PENNSYLVANIA
INDIANA, PA

APPROVAL / DATE

___-___-___ _____

PROJECT NUMBER

1004.05

SIGN TYPE	SHEET NO.
03,04	02

KMA DESIGN
135 TECHNOLOGY DRIVE, SUITE 401 - CANONSBURG, PA 15317 VOICE 724.745.8601 FAX 724.745.8607 WWW.THEKMAGROUP.COM

©2010 KMA DESIGN

1 SIGN TYPE 06 - WALL-MOUNT SECTION IDENTIFICATION
ELEVATION
SCALE: 1/2" = 1"

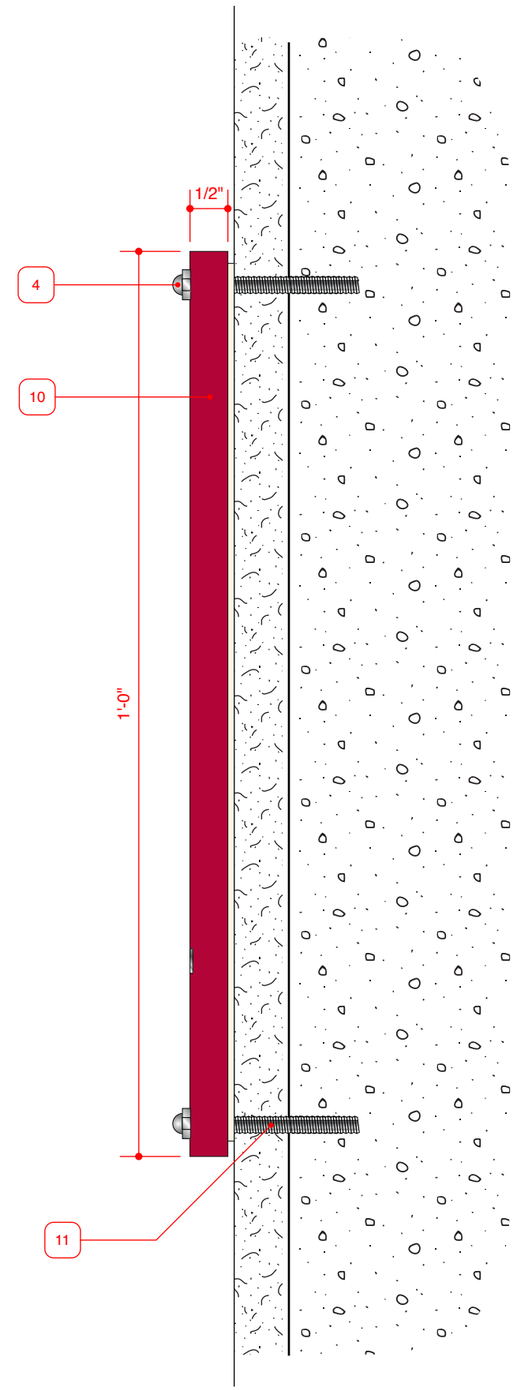

2 SIGN TYPE 06 - WALL-MOUNT SECTION IDENTIFICATION
END VIEW
SCALE: 1/2" = 1"

DRAWN BY	CHECKED BY
MICHAEL MARTIN	BARBARA MARTIN

ISSUED FOR / DATE

CONSTRUCTION DOCUMENTS 09-15-10

REVISION NUMBER

DRAWING TITLE

SIGN TYPE 06 - WALL-MOUNT SECTION I.D.

NOTES

OWNER

INDIANA UNIVERSITY OF PENNSYLVANIA
INDIANA, PA

APPROVAL / DATE

___-___-___ _____

PROJECT NUMBER

1004.05

SIGN TYPE	SHEET NO.
06	03

KMA DESIGN
135 TECHNOLOGY DRIVE, SUITE 401 - CANONSBURG, PA 15317 VOICE 724.745.8601 FAX 724.745.8607 WWW.THEKMAGROUP.COM

©2010 KMA DESIGN

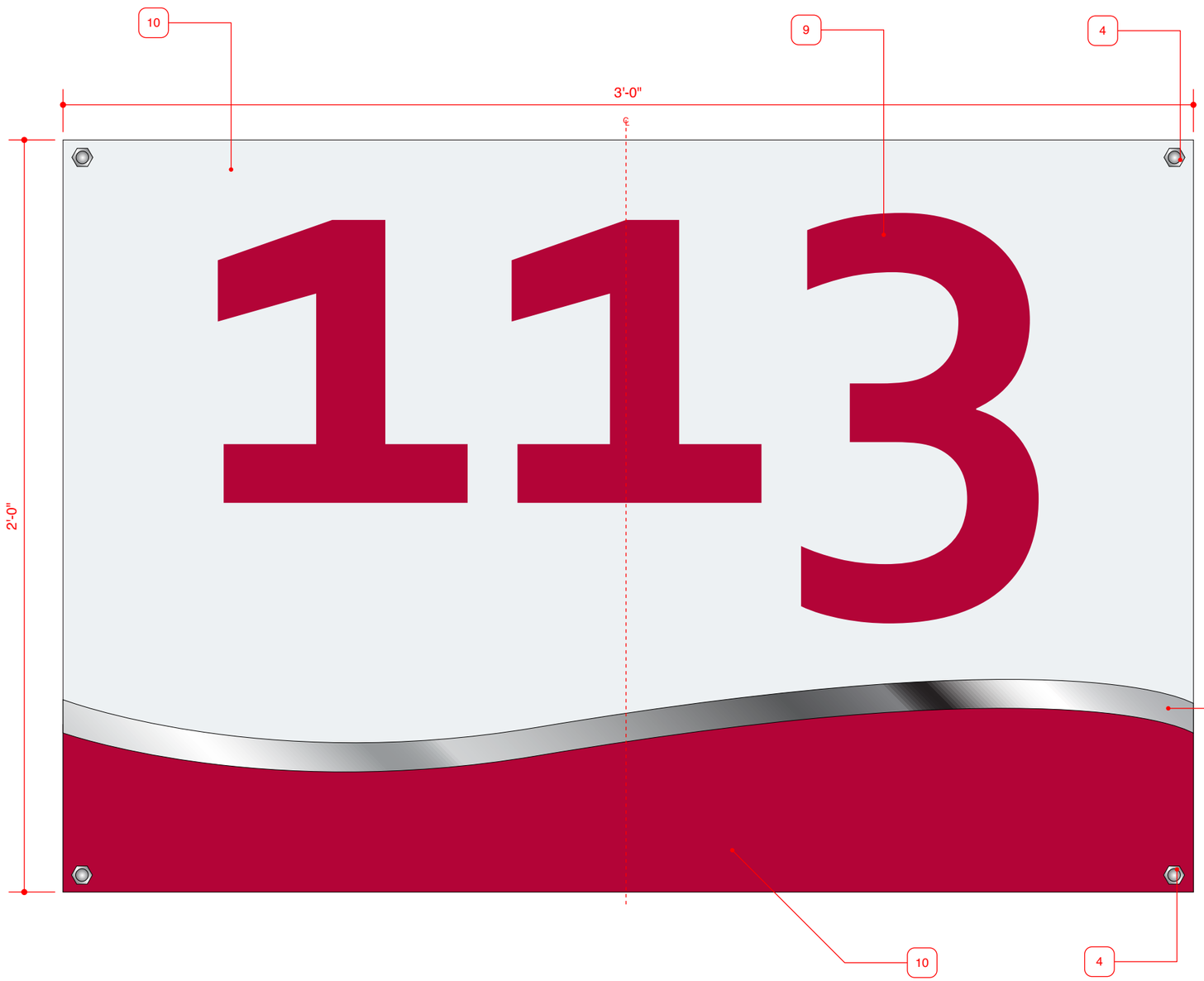

1 SIGN TYPE 07 - WALL-MOUNT SECTION IDENTIFICATION (IN-BOWL)
ELEVATION

SCALE: 1/4" = 1"

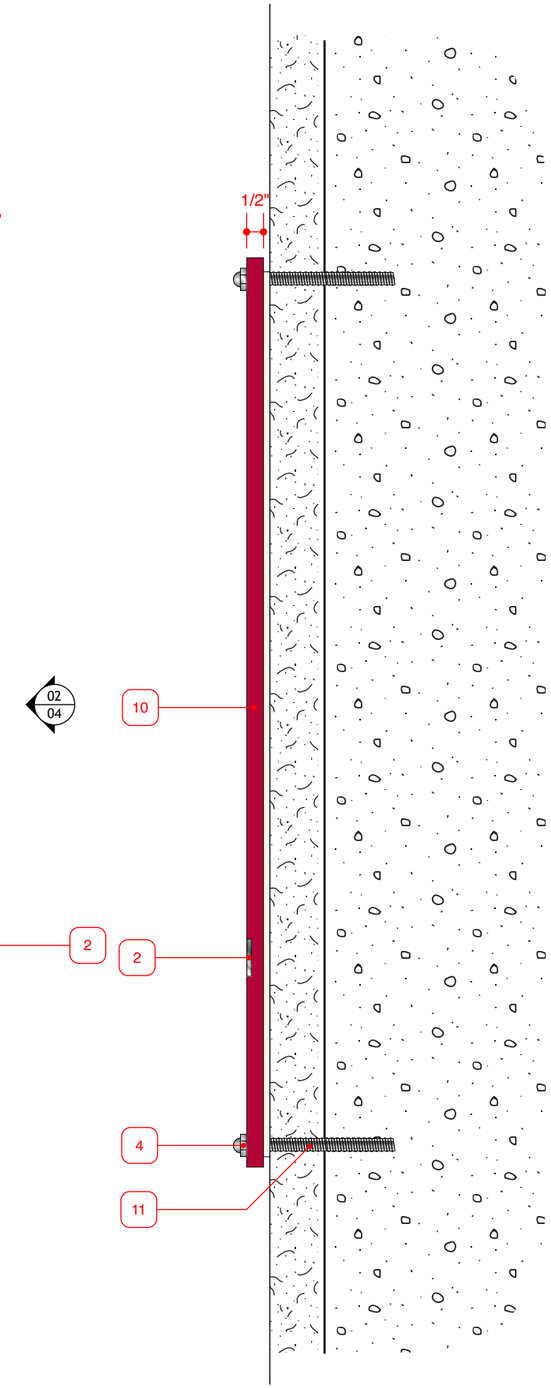

2 SIGN TYPE 07
END VIEW

SCALE: 1/4" = 1"

DRAWN BY	CHECKED BY
MICHAEL MARTIN	BARBARA MARTIN

ISSUED FOR / DATE

CONSTRUCTION DOCUMENTS 09-15-10

REVISION NUMBER

DRAWING TITLE

SIGN TYPE 07 - WALL-MOUNT SECTION I.D. (IN-BOWL)

NOTES

OWNER

INDIANA UNIVERSITY OF PENNSYLVANIA
INDIANA, PA

APPROVAL / DATE

___-___-___ _____

PROJECT NUMBER

1004.05

SIGN TYPE	SHEET NO.
07	04

KMA DESIGN
135 TECHNOLOGY DRIVE, SUITE 401 - CANONSBURG, PA 15317 VOICE 724.745.8601 FAX 724.745.8607 WWW.THEKMAGROUP.COM

©2010 KMA DESIGN

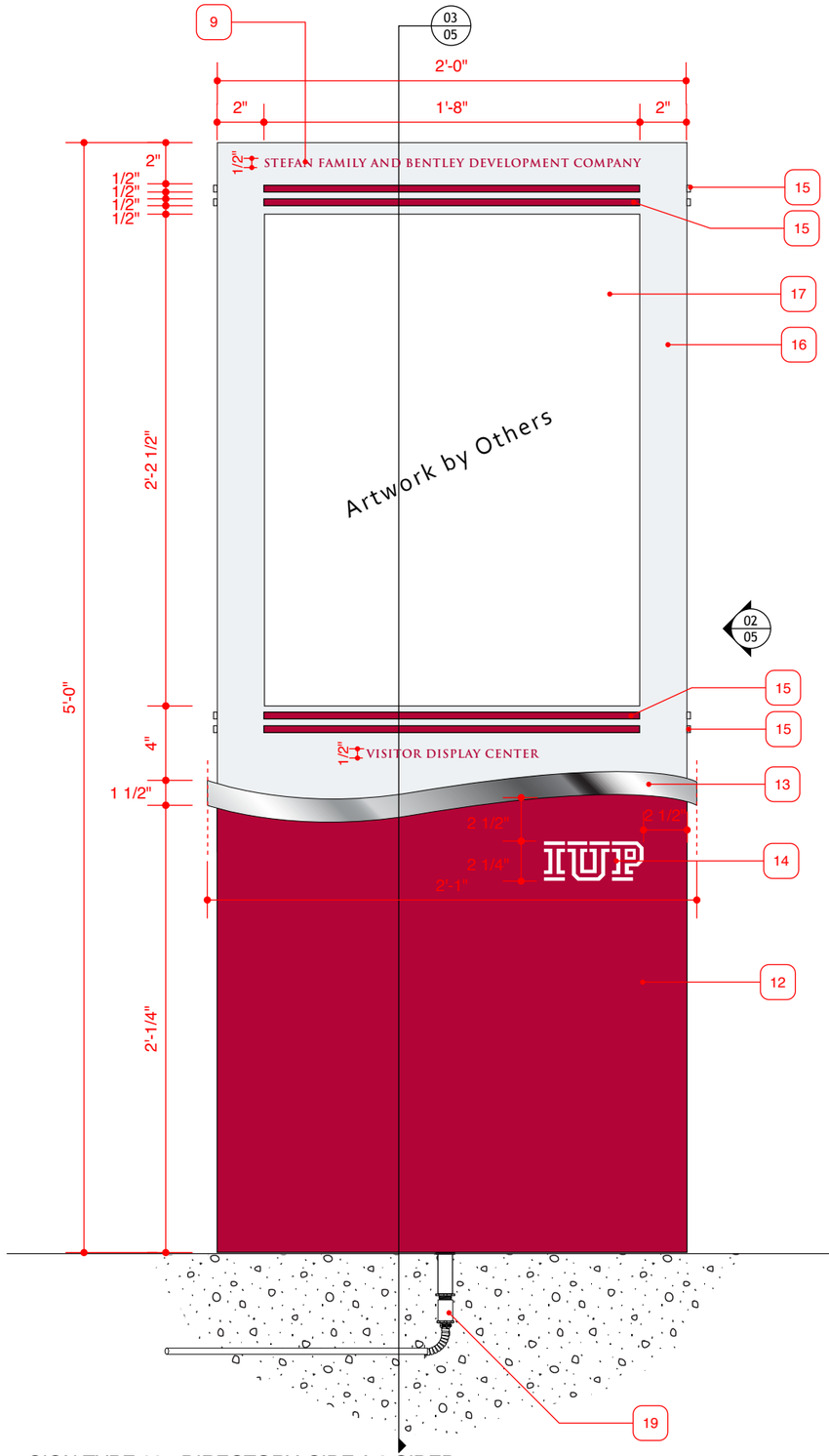

1 SIGN TYPE 08 - DIRECTORY, SIDE A 2-SIDED ELEVATION

SCALE: 1/4" = 1"

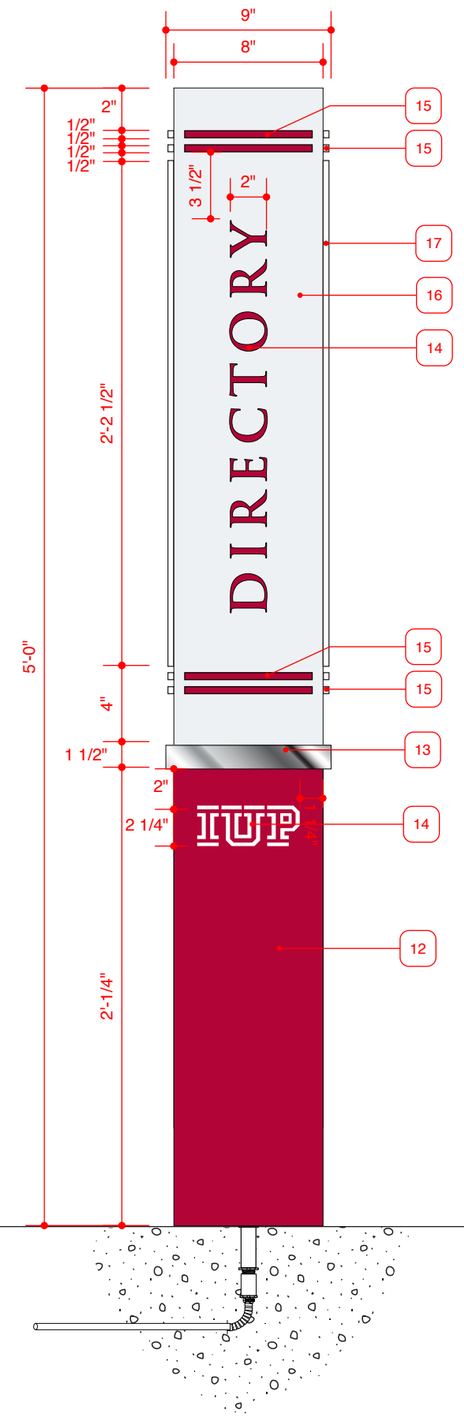

2 SIGN TYPE 08 - DIRECTORY END VIEW

SCALE: 1/4" = 1"

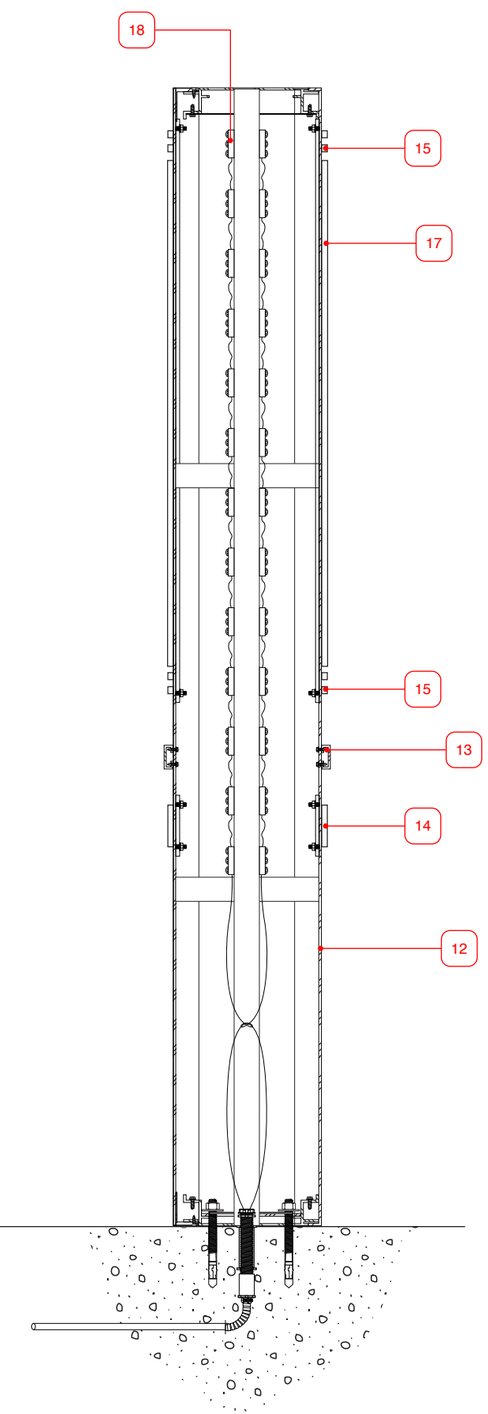

3 SIGN TYPE 08 - DIRECTORY SECTION

SCALE: 1/4" = 1"

DRAWN BY	CHECKED BY
MICHAEL MARTIN	BARBARA MARTIN

ISSUED FOR / DATE

CONSTRUCTION DOCUMENTS 09-15-10

REVISION NUMBER

DRAWING TITLE

SIGN TYPE 08 - DIRECTORY

NOTES

SIDE A AND B ARE MIRROR IMAGES OF EACHOTHER

OWNER

INDIANA UNIVERSITY OF PENNSYLVANIA
INDIANA, PA

APPROVAL / DATE

___-___-___ _____

PROJECT NUMBER

1004.05

SIGN TYPE	SHEET NO.
08	05

KMA DESIGN
135 TECHNOLOGY DRIVE, SUITE 401 - CANONSBURG, PA 15317 VOICE 724.745.8601 FAX 724.745.8607 WWW.THEKMAGROUP.COM

©2010 KMA DESIGN

1 SIGN TYPE 09 - WALL-MOUNT DIRECTIONAL
ELEVATION

SCALE: 1/4" = 1"

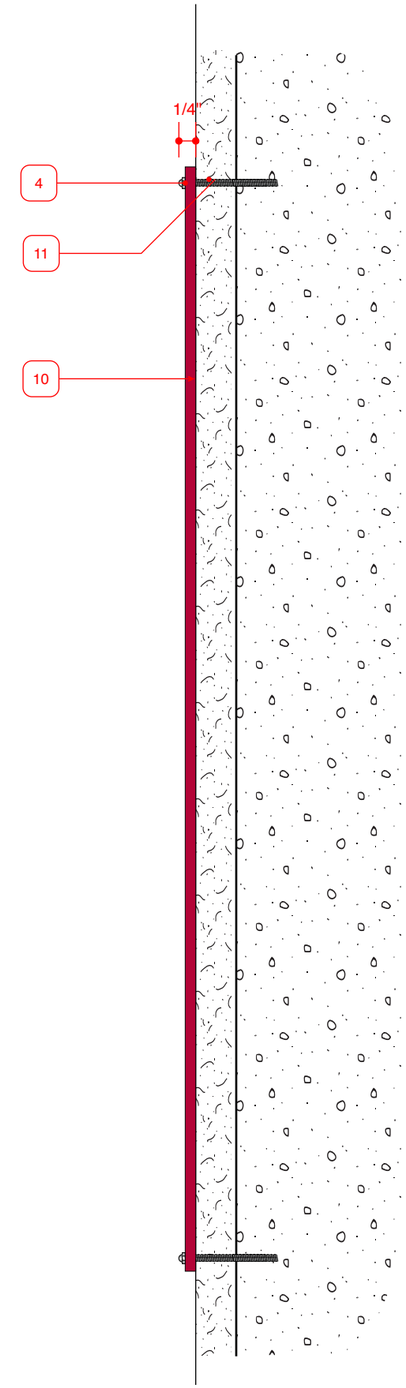

2 SIGN TYPE 09 - WALL-MOUNT DIRECTIONAL
END VIEW

SCALE: 1/4" = 1"

DRAWN BY	CHECKED BY
MICHAEL MARTIN	BARBARA MARTIN

ISSUED FOR / DATE

CONSTRUCTION DOCUMENTS 09-15-10

REVISION NUMBER

DRAWING TITLE

SIGN TYPE 09 - WALL-MOUNT DIRECTIONAL

NOTES

OWNER

INDIANA UNIVERSITY OF PENNSYLVANIA
INDIANA, PA

APPROVAL / DATE

___-___-___ _____

PROJECT NUMBER

1004.05

SIGN TYPE	SHEET NO.
09	06

KMA DESIGN
135 TECHNOLOGY DRIVE, SUITE 401 - CANONSBURG, PA 15317 VOICE 724.745.8601 FAX 724.745.8607 WWW.THEKMAGROUP.COM

©2010 KMA DESIGN

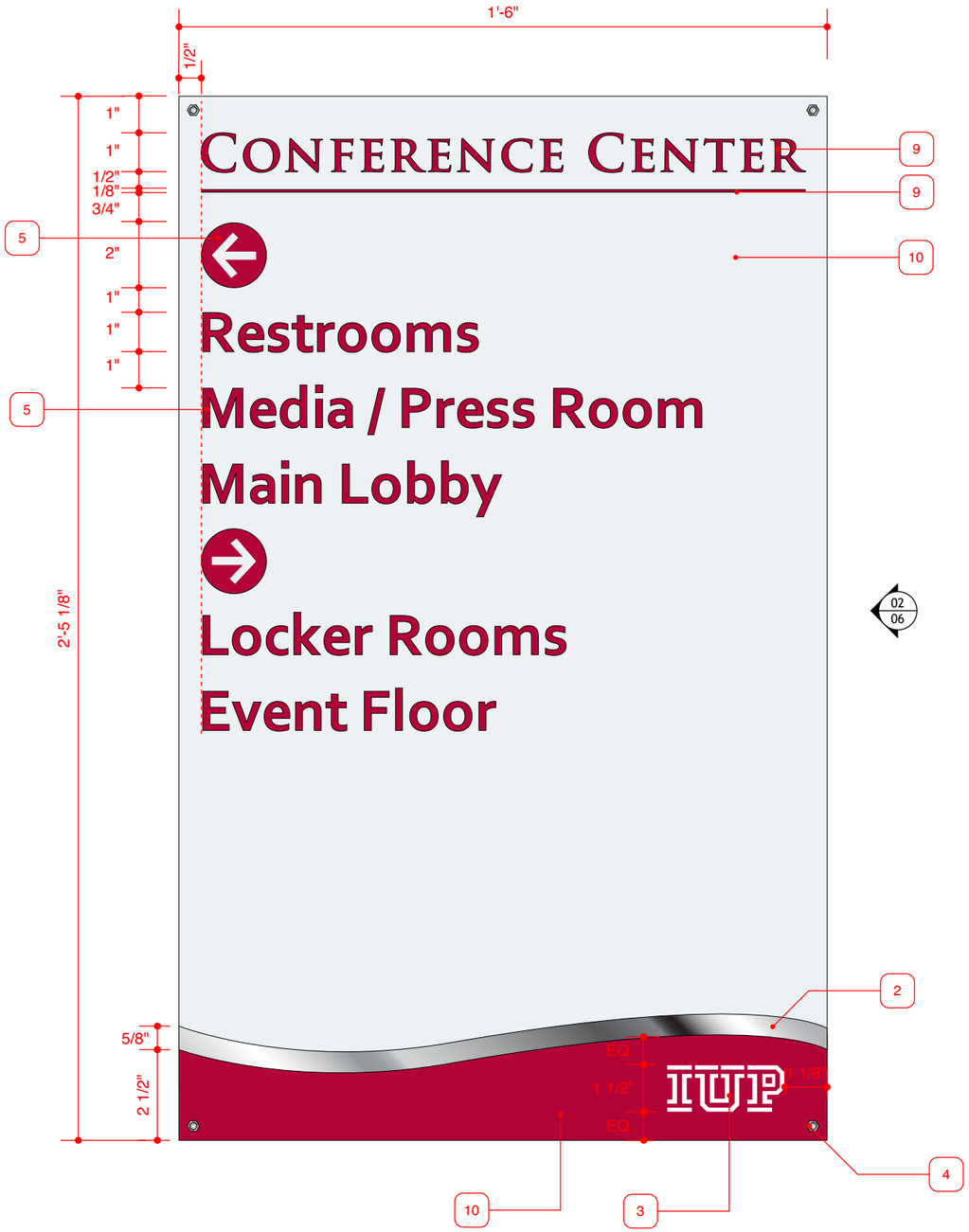

1 SIGN TYPE 10 - WALL-MOUNT CONFERENCE CENTER DIRECTIONAL ELEVATION

SCALE: 1/4" = 1"

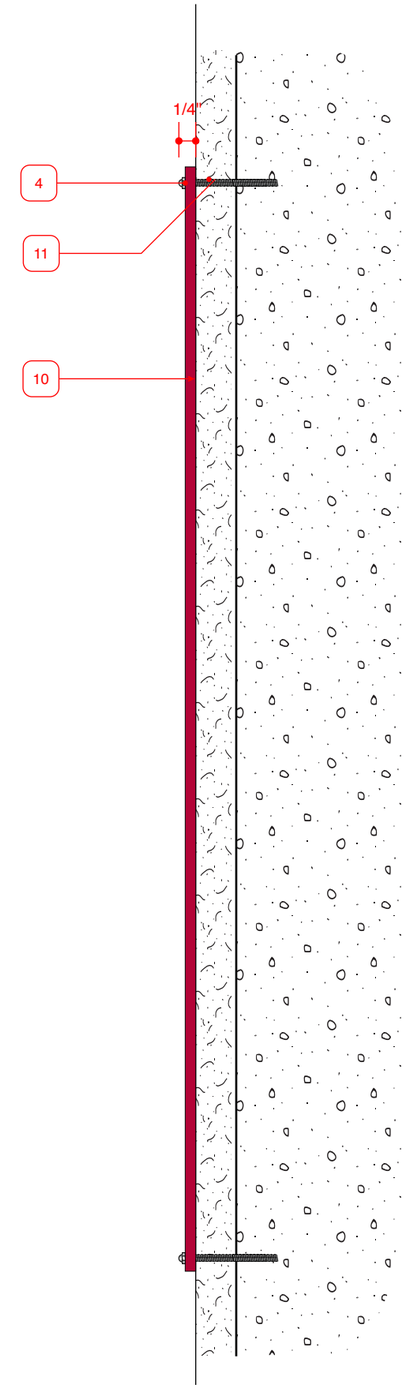

2 SIGN TYPE 10 - WALL-MOUNT CONFERENCE CENTER DIRECTIONAL END VIEW

SCALE: 1/4" = 1"

DRAWN BY	CHECKED BY
MICHAEL MARTIN	BARBARA MARTIN

ISSUED FOR / DATE

CONSTRUCTION DOCUMENTS 09-15-10

REVISION NUMBER

DRAWING TITLE

SIGN TYPE 10 - WALL-MOUNT DIRECTIONAL

NOTES

OWNER

INDIANA UNIVERSITY OF PENNSYLVANIA
INDIANA, PA

APPROVAL / DATE

___-___-___ _____

PROJECT NUMBER

1004.05

SIGN TYPE	SHEET NO.
10	07

KMA DESIGN
135 TECHNOLOGY DRIVE, SUITE 401 - CANONSBURG, PA 15317 VOICE 724.745.8601 FAX 724.745.8607 WWW.THEKMAGROUP.COM

©2010 KMA DESIGN

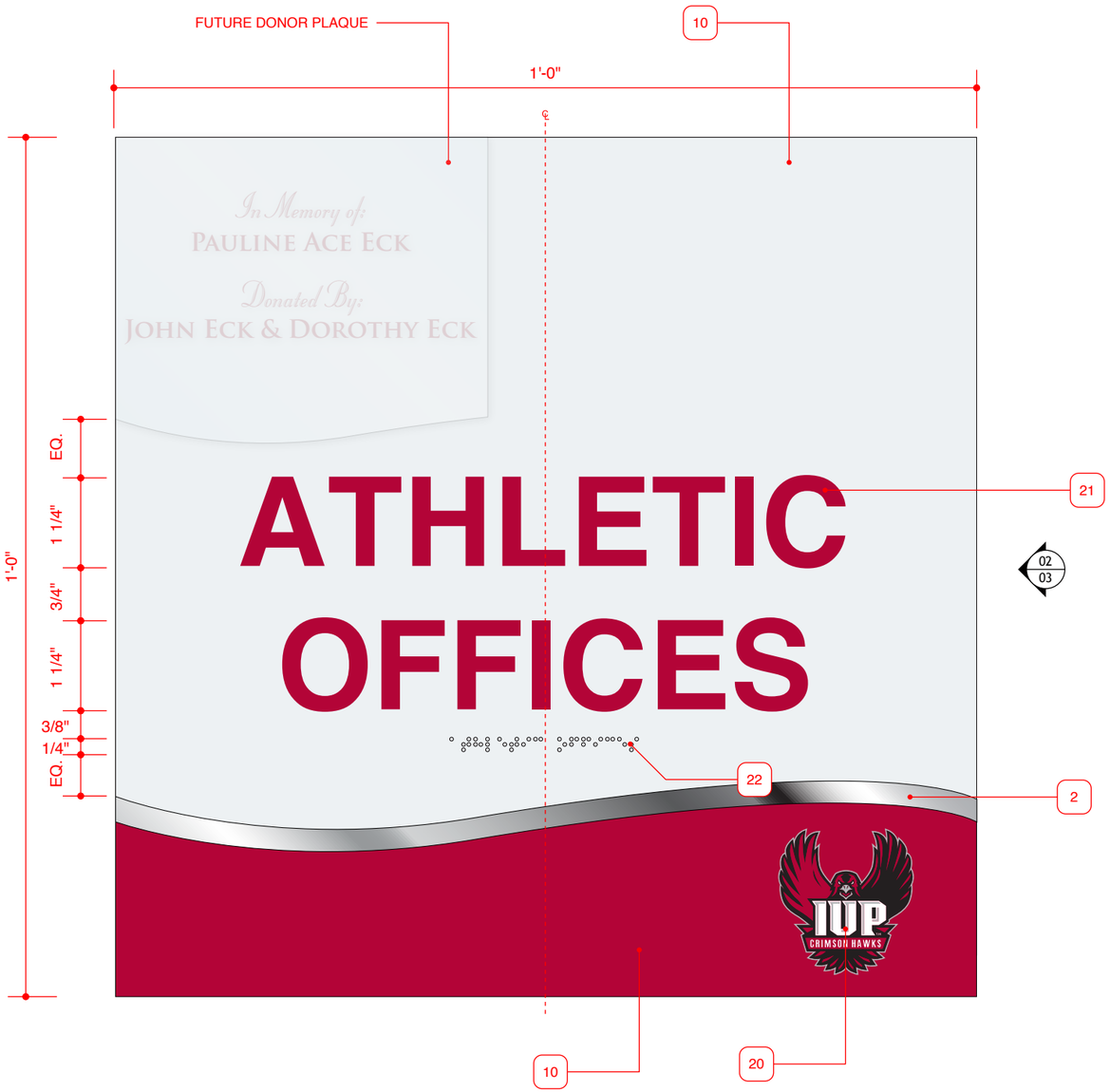

1 SIGN TYPE 11 - DEPARTMENT IDENTIFICATION
ELEVATION

SCALE: 1/2" = 1"

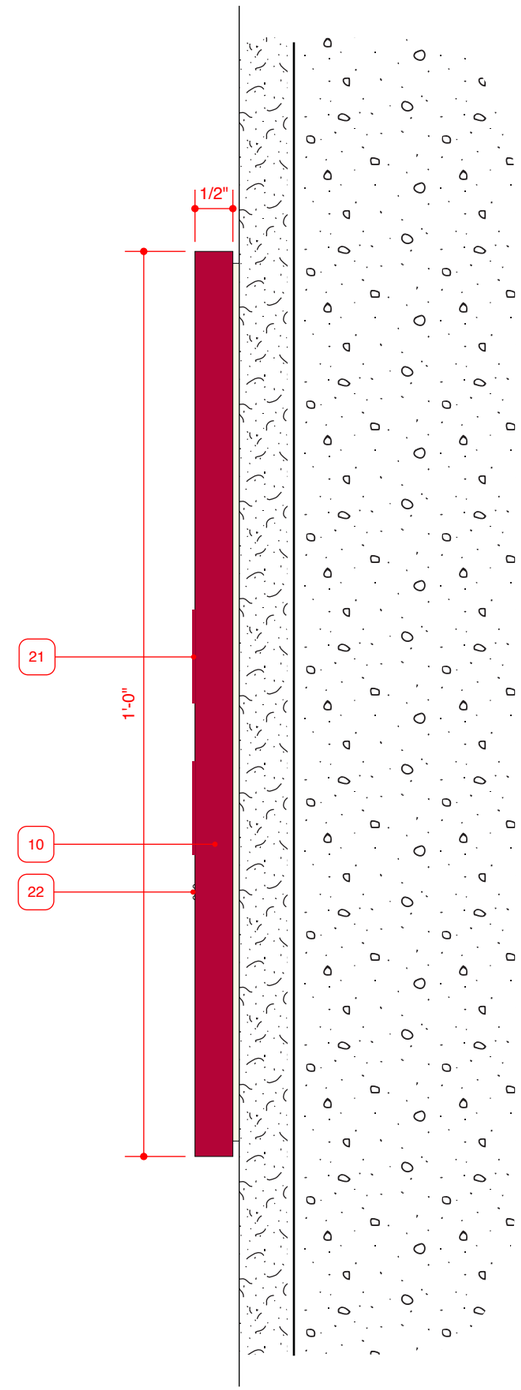

2 SIGN TYPE 11 - DEPARTMENT IDENTIFICATION
END VIEW

SCALE: 1/2" = 1"

DRAWN BY	CHECKED BY
MICHAEL MARTIN	BARBARA MARTIN

ISSUED FOR / DATE

CONSTRUCTION DOCUMENTS 09-15-10

REVISION NUMBER

DRAWING TITLE

SIGN TYPE 11 - DEPARTMENT IDENTIFICATION

NOTES

OWNER

INDIANA UNIVERSITY OF PENNSYLVANIA
INDIANA, PA

APPROVAL / DATE

___-___-___ _____

PROJECT NUMBER

1004.05

SIGN TYPE	SHEET NO.
11	08

KMA DESIGN
135 TECHNOLOGY DRIVE, SUITE 401 - CANONSBURG, PA 15317 VOICE 724.745.8601 FAX 724.745.8607 WWW.THEKMAGROUP.COM

©2010 KMA DESIGN

1 SIGN TYPE 12 - ROOM SIGN DONOR CLIP ATTACHMENT (ADA SIGN PROVIDED BY OTHERS)
ELEVATION

SCALE: 1/2" = 1"

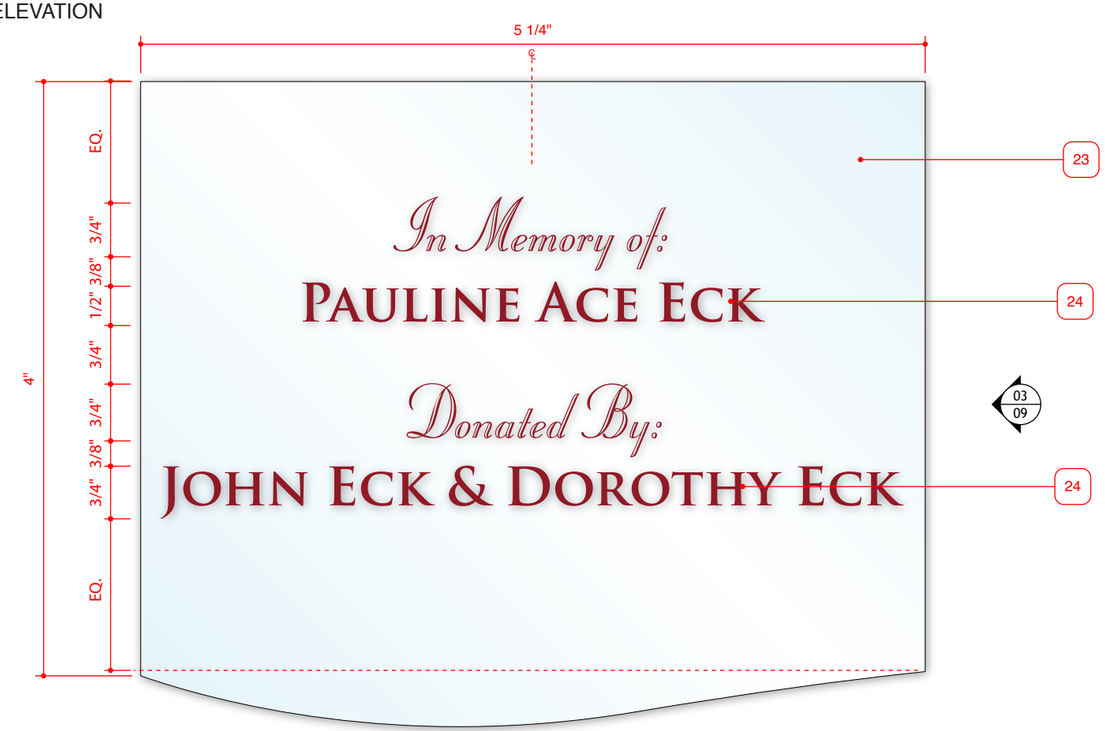

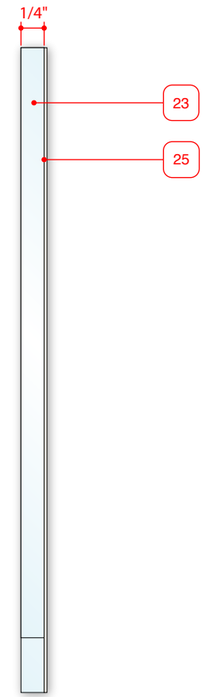

2 SIGN TYPE 12 - ROOM SIGN DONOR CLIP ATTACHMENT
ELEVATION

SCALE: HALF

3 SIGN TYPE 12 - ROOM SIGN DONOR CLIP ATTACHMENT
END VIEW

SCALE: HALF

DRAWN BY	CHECKED BY
MICHAEL MARTIN	BARBARA MARTIN

ISSUED FOR / DATE

CONSTRUCTION DOCUMENTS 09-15-10

REVISION NUMBER

DRAWING TITLE

SIGN TYPE 12 - ROOM SIGN DONOR CLIP ATTACHMENT

NOTES

OWNER

INDIANA UNIVERSITY OF PENNSYLVANIA
INDIANA, PA

APPROVAL / DATE

___-___-___ _____

PROJECT NUMBER

1004.05

SIGN TYPE	SHEET NO.
12	09

KMA DESIGN
135 TECHNOLOGY DRIVE, SUITE 401 - CANONSBURG, PA 15317 VOICE 724.745.8601 FAX 724.745.8607 WWW.THEKMAGROUP.COM

©2010 KMA DESIGN

1 SIGN TYPE 12.1 - DONOR PLAQUE
ELEVATION

SCALE: 1" = 1'-0"

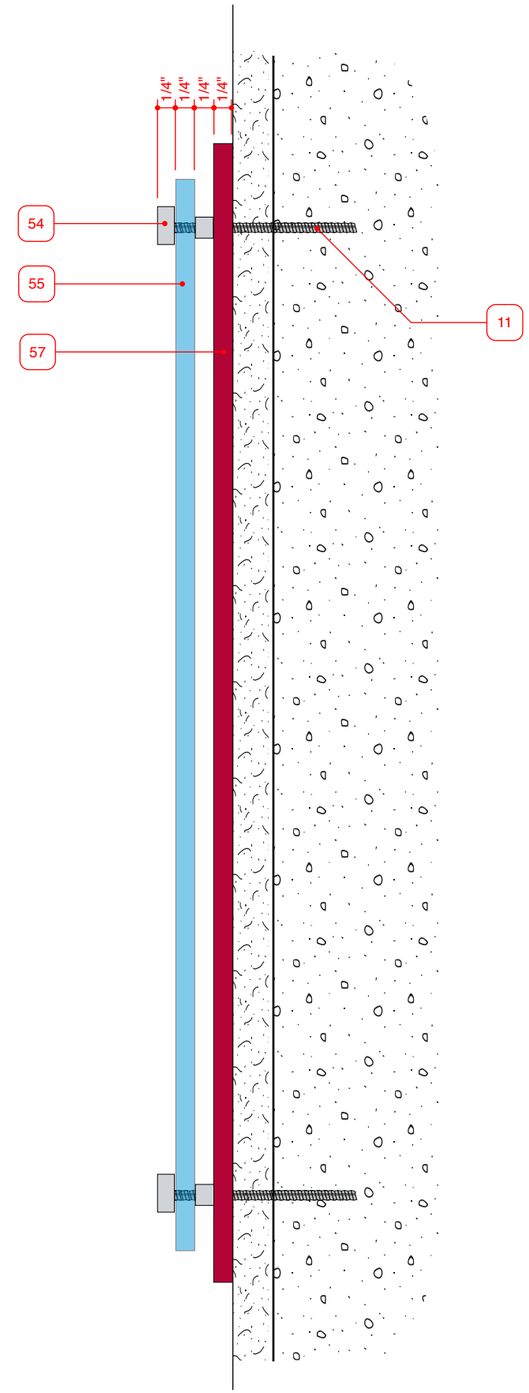

2 SIGN TYPE 12.1 - DONOR PLAQUE
END VIEW

SCALE: 1" = 1'-0"

DRAWN BY	CHECKED BY
MICHAEL MARTIN	BARBARA MARTIN

ISSUED FOR / DATE

CONSTRUCTION DOCUMENTS 09-15-10

REVISION NUMBER

DRAWING TITLE

SIGN TYPE 12.1 - DONOR PLAQUE

NOTES

OWNER

INDIANA UNIVERSITY OF PENNSYLVANIA
INDIANA, PA

APPROVAL / DATE

___-___-___ _____

PROJECT NUMBER

1004.05

SIGN TYPE	SHEET NO.
12.1	09.1

KMA DESIGN
135 TECHNOLOGY DRIVE, SUITE 401 - CANONSBURG, PA 15317 VOICE 724.745.8601 FAX 724.745.8607 WWW.THEKMAGROUP.COM

©2010 KMA DESIGN

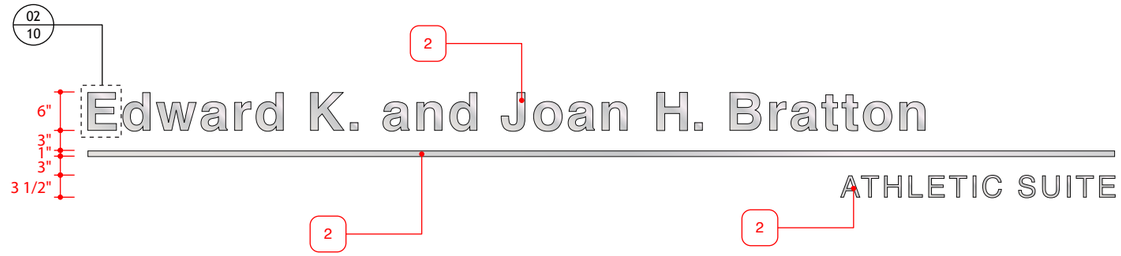

1 SIGN TYPE 13 - DONOR CUT-OUT LETTERS
ELEVATION

SCALE: 3/4" = 1'-0"

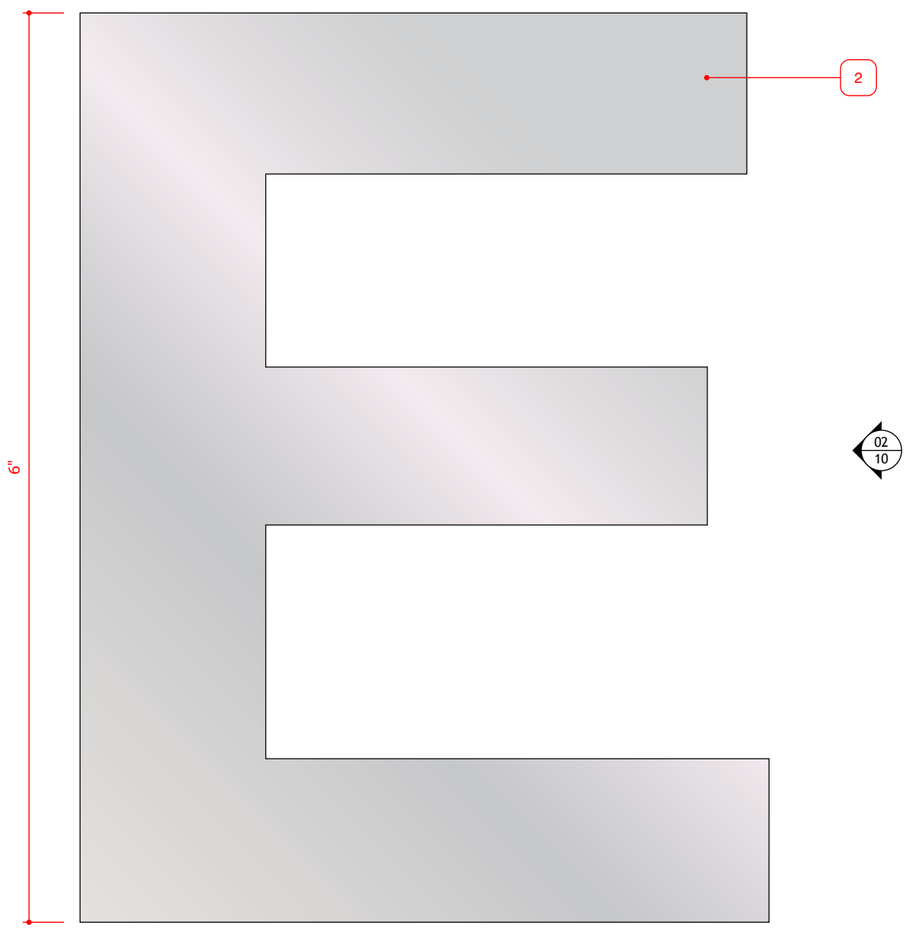

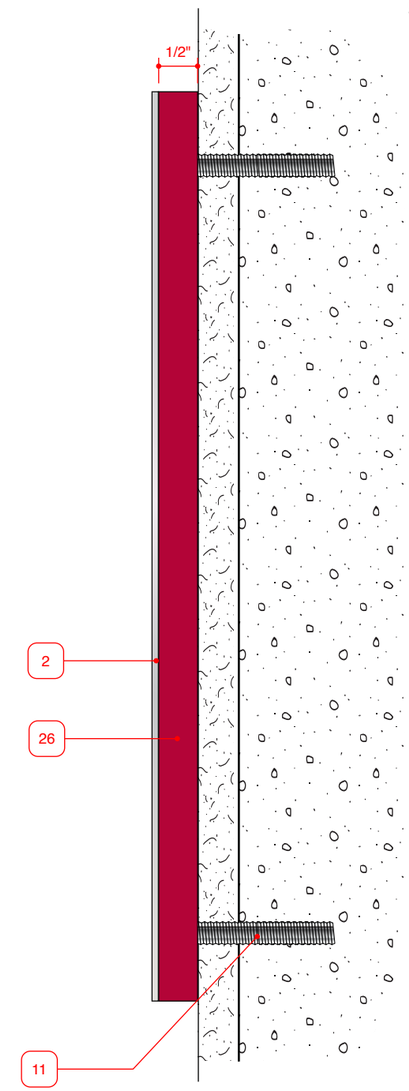

2 SIGN TYPE 13 - DONOR CUT-OUT LETTERS
ELEVATION

SCALE: FULL

3 SIGN TYPE 13 - DONOR CUT-OUT LETTERS
END VIEW

SCALE: FULL

DRAWN BY	CHECKED BY
MICHAEL MARTIN	BARBARA MARTIN

ISSUED FOR / DATE

CONSTRUCTION DOCUMENTS 09-15-10

REVISION NUMBER

DRAWING TITLE

SIGN TYPE 13 - DONOR RECOGNITION CUT-OUT LETTERS

NOTES

OVERALL LENGTH TO CHANGE BASED UPON DONOR NAME.
HORIZONTAL BAR DETAIL TO MAINTAIN 2'-6" PAST END OF DONOR NAME

OWNER

INDIANA UNIVERSITY OF PENNSYLVANIA
INDIANA, PA

APPROVAL / DATE

___-___-___ _____

PROJECT NUMBER

1004.05

SIGN TYPE	SHEET NO.
13	10

KMA DESIGN
135 TECHNOLOGY DRIVE, SUITE 401 - CANONSBURG, PA 15317 VOICE 724.745.8601 FAX 724.745.8607 WWW.THEKMAGROUP.COM

©2010 KMA DESIGN

1 SIGN TYPE 23 - NCAA BOWL BANNERS
OVERALL ELEVATION

SCALE: NTS

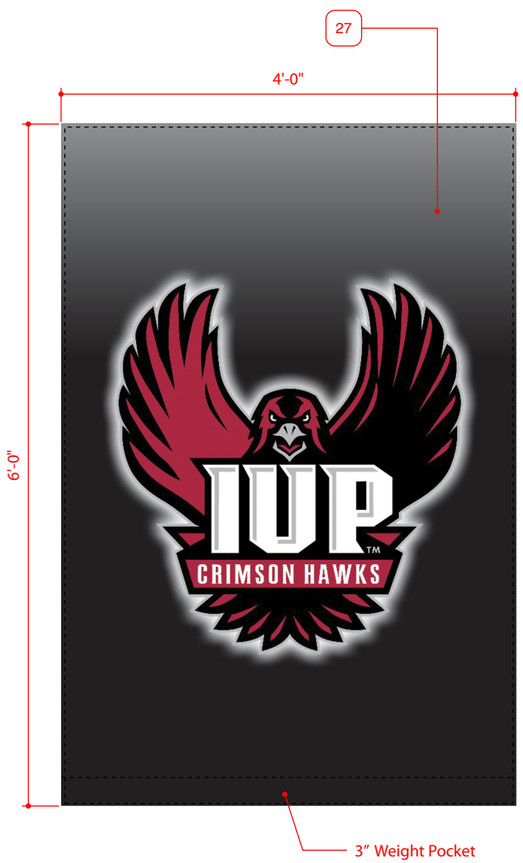

2 SIGN TYPE 23 - NCAA BOWL BANNERS (16 TOTAL)
ELEVATION

SCALE: 3/4" = 1'-0"

3 SIGN TYPE 22 - CHAMPIONSHIP BANNERS (6 TOTAL)
ELEVATION

SCALE: 3/4" = 1'-0"

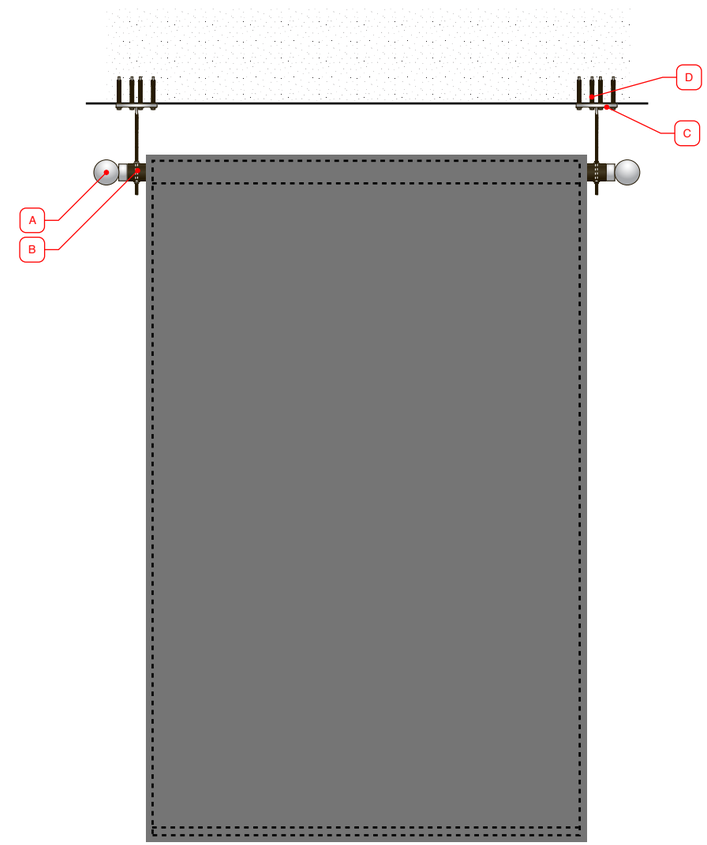

4 SIGN TYPE 22/23
MOUNTING DETAIL

SCALE: 3/4" = 1'-0"

DRAWN BY	CHECKED BY
MICHAEL MARTIN	BARBARA MARTIN

ISSUED FOR / DATE

CONSTRUCTION DOCUMENTS 09-15-10

REVISION NUMBER

DRAWING TITLE

SIGN TYPE 22 - NCAA BOWL BANNERS
SIGN TYPE 23 - CHAMPIONSHIP BANNERS

NOTES

A. 3" FINIAL - AKZO NOBEL METALLIC PAINT #352-A12
B. 2" STEEL MOUNTING ROD – BLACK
C. .5 STEEL MOUNTING PLATE - AKZO NOBEL METALLIC PAINT #352-A12
D. MOUNTING HARDWARE TBD BY STRUCTURAL ENGINEER

IMAGES TO BE DETERMINED

ONE - SIDED

OWNER

INDIANA UNIVERSITY OF PENNSYLVANIA
INDIANA, PA

APPROVAL / DATE

___-___-___ _____

PROJECT NUMBER

1004.05

SIGN TYPE	SHEET NO.
22,23	11

KMA DESIGN
135 TECHNOLOGY DRIVE, SUITE 401 - CANONSBURG, PA 15317 VOICE 724.745.8601 FAX 724.745.8607 WWW.THEKMAGROUP.COM

©2010 KMA DESIGN

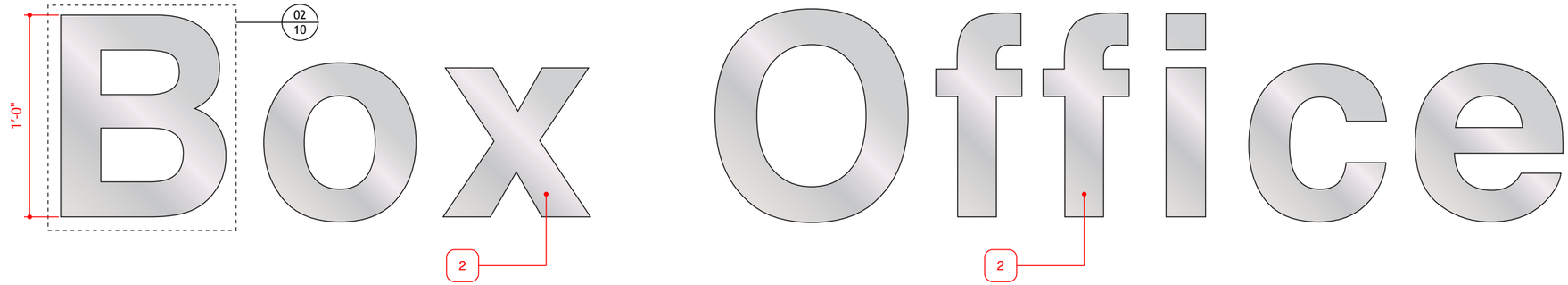

1 SIGN TYPE 13 / S1 - CUT-OUT LETTERS
ELEVATION

SCALE: 1/8" = 1"

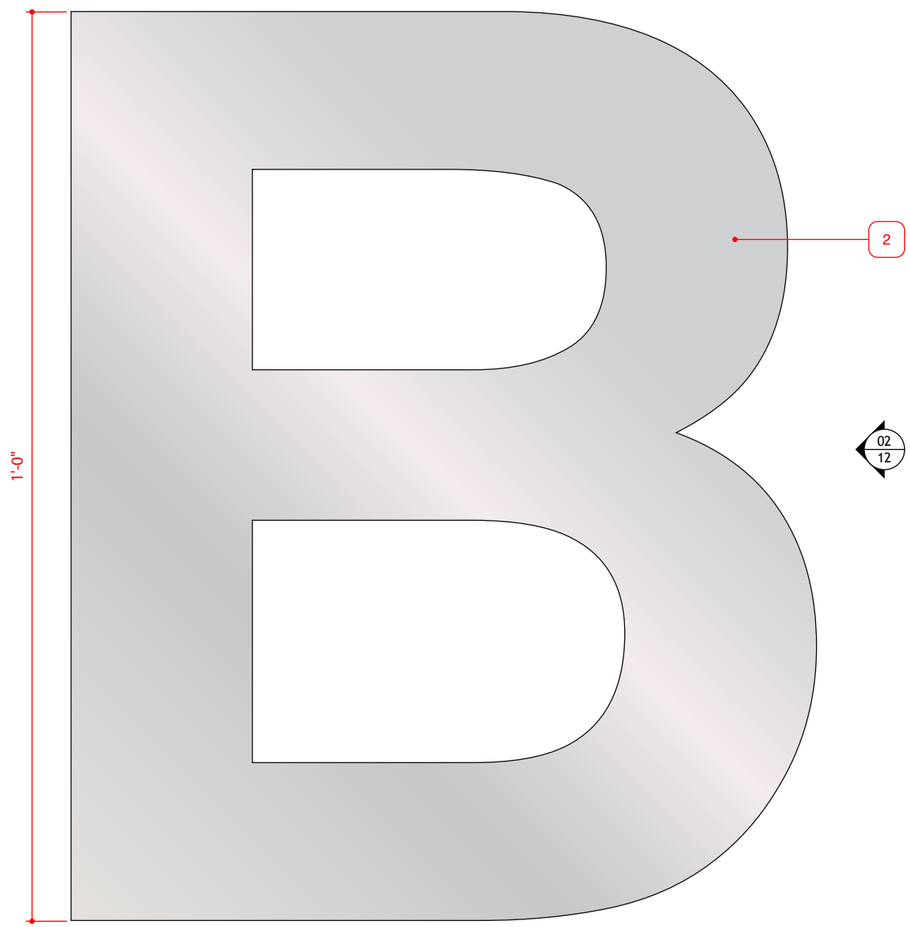

2 SIGN TYPE 13.1 - CUT-OUT LETTER
ELEVATION

SCALE: 1/2" = 1"

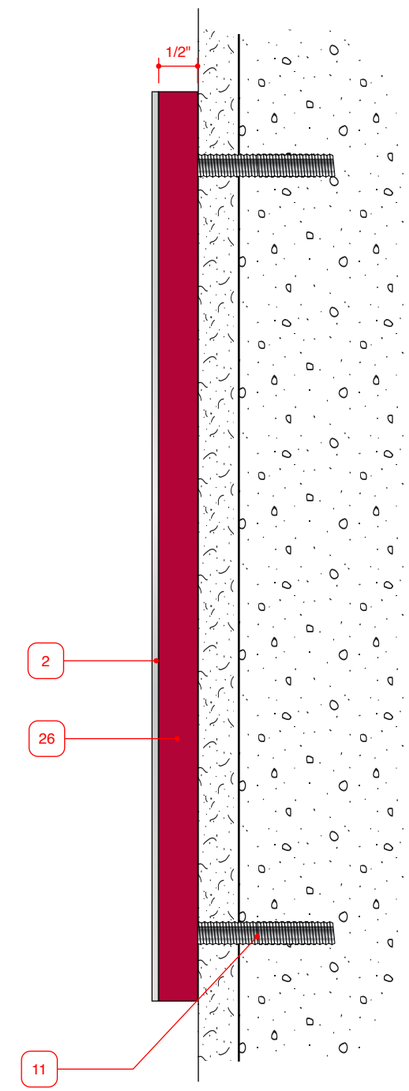

3 SIGN TYPE 13.1 - CUT-OUT LETTER
END VIEW

SCALE: 1/2" = 1"

DRAWN BY	CHECKED BY
MICHAEL MARTIN	BARBARA MARTIN

ISSUED FOR / DATE

CONSTRUCTION DOCUMENTS 09-15-10

REVISION NUMBER

DRAWING TITLE

SIGN TYPE 13.1 - BOX OFFICE IDENTIFICATION

NOTES

OWNER

INDIANA UNIVERSITY OF PENNSYLVANIA
INDIANA, PA

APPROVAL / DATE

___-___-___ _____

PROJECT NUMBER

1004.05

SIGN TYPE	SHEET NO.
13.1	12

KMA DESIGN
135 TECHNOLOGY DRIVE, SUITE 401 - CANONSBURG, PA 15317 VOICE 724.745.8601 FAX 724.745.8607 WWW.THEKMAGROUP.COM

©2010 KMA DESIGN

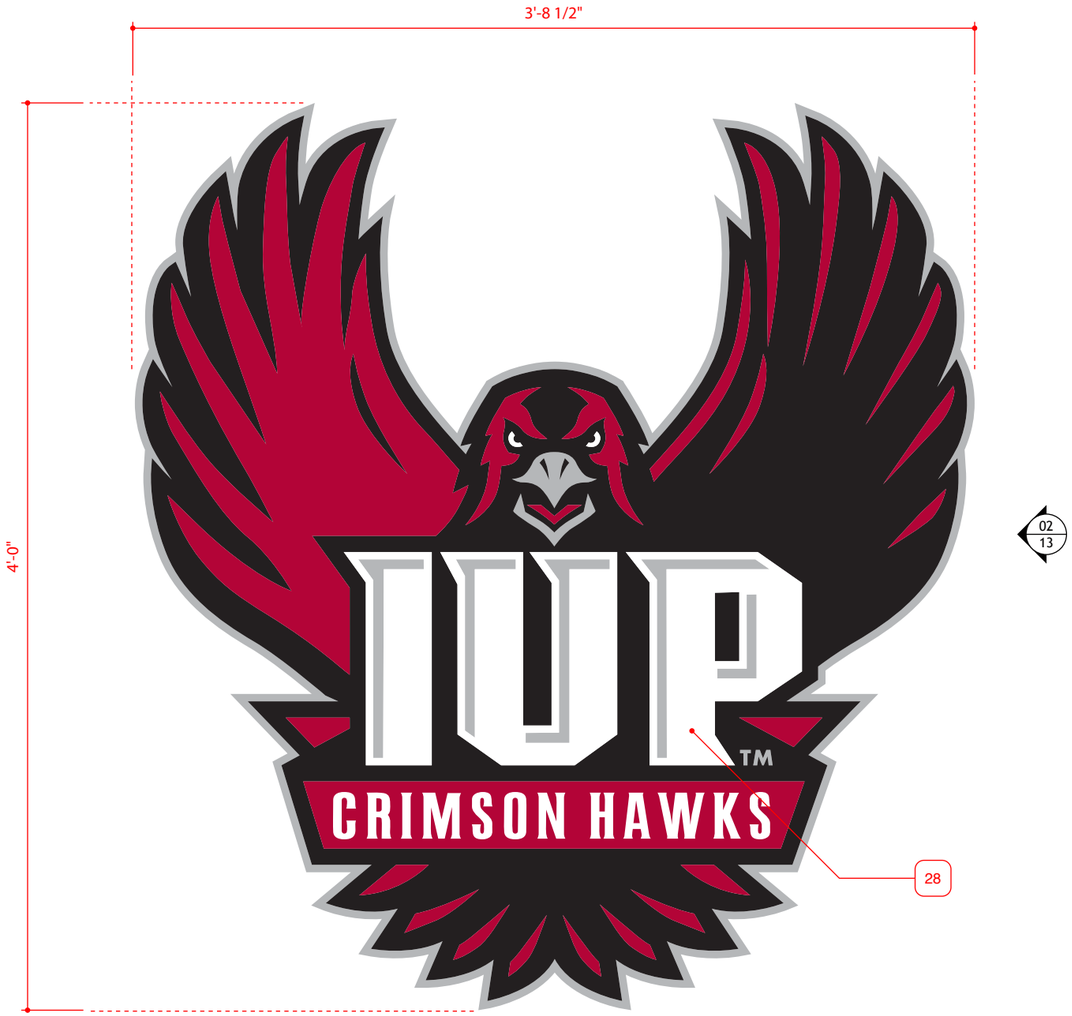

1 SIGN TYPE 16 - CRIMSON HAWK LOGO
ELEVATION

SCALE: 1 1/2" = 1'-0"

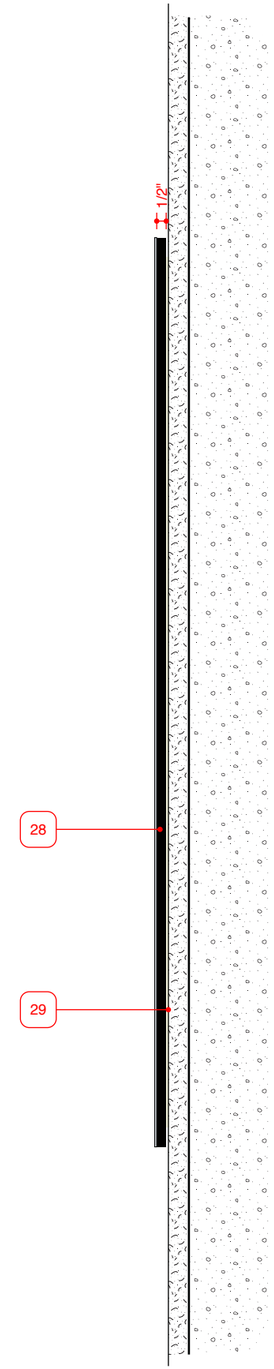

2 SIGN TYPE 16 - CRIMSON HAWK LOGO
END VIEW

SCALE: 1 1/2" = 1'-0"

DRAWN BY	CHECKED BY
MICHAEL MARTIN	BARBARA MARTIN

ISSUED FOR / DATE

CONSTRUCTION DOCUMENTS 09-15-10

REVISION NUMBER

DRAWING TITLE

SIGN TYPE 16 - LOCKER ROOM / ATHLETIC OFFICE HAWK LOGO

NOTES

OWNER

INDIANA UNIVERSITY OF PENNSYLVANIA
INDIANA, PA

APPROVAL / DATE

___-___-___ _____

PROJECT NUMBER

1004.05

SIGN TYPE	SHEET NO.
16	13

KMA DESIGN
135 TECHNOLOGY DRIVE, SUITE 401 - CANONSBURG, PA 15317 VOICE 724.745.8601 FAX 724.745.8607 WWW.THEKMAGROUP.COM

©2010 KMA DESIGN

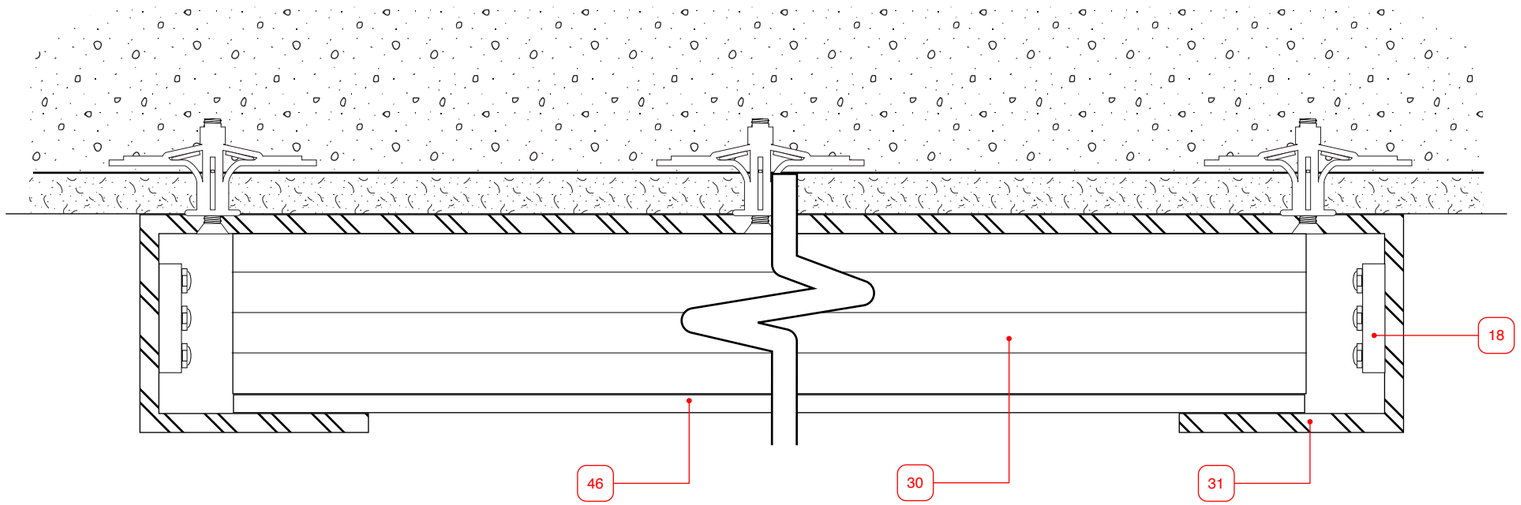

1 SIGN TYPE 26 - DONOR WALL / ATHLETIC ENDOWMENTS
HORIZONTAL SECTION

SCALE: FULL

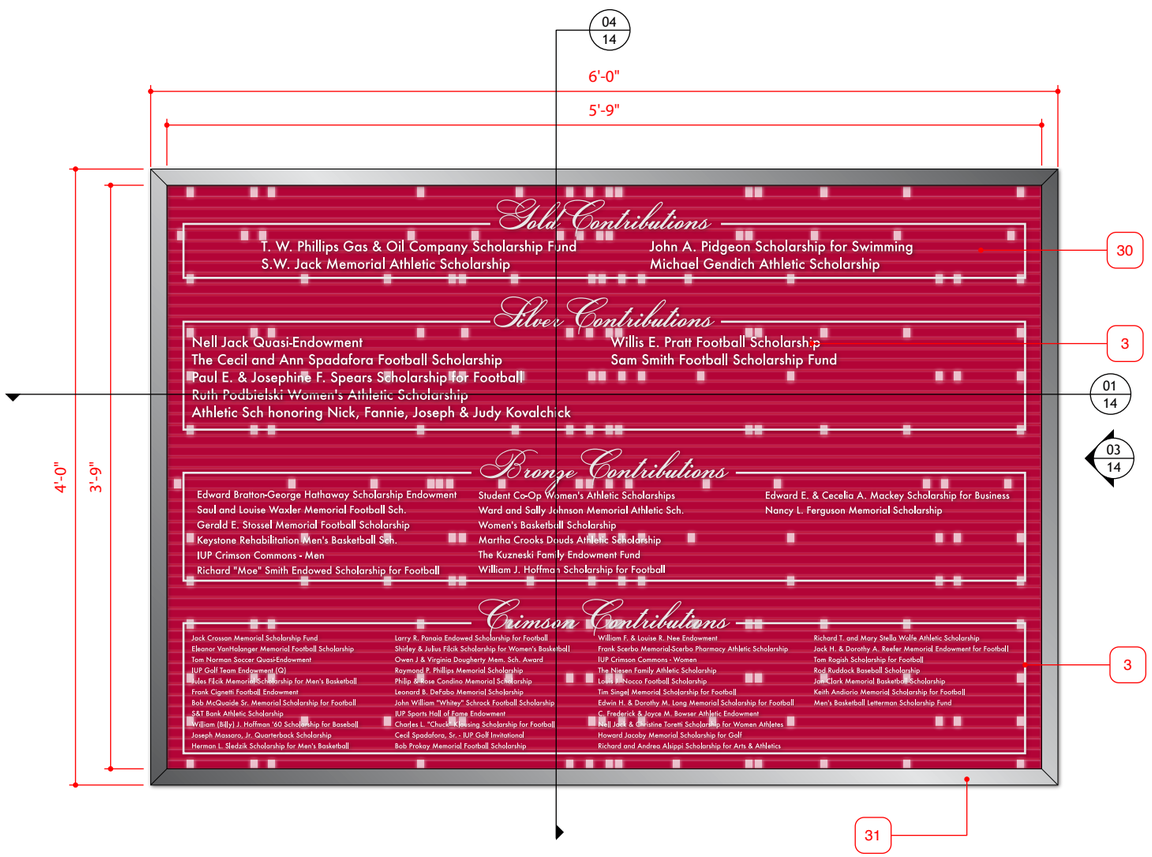

2 SIGN TYPE 26 - DONOR WALL / ATHLETIC ENDOWMENTS
ELEVATION

SCALE: 1" = 1'-0"

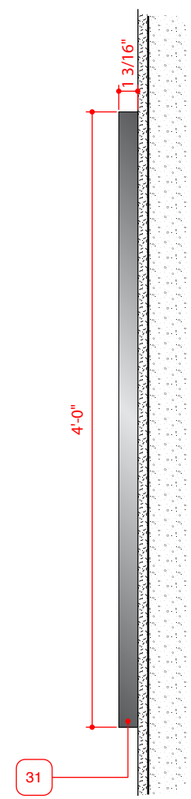

3 SIGN TYPE 26
END VIEW

SCALE: 1" = 1'-0"

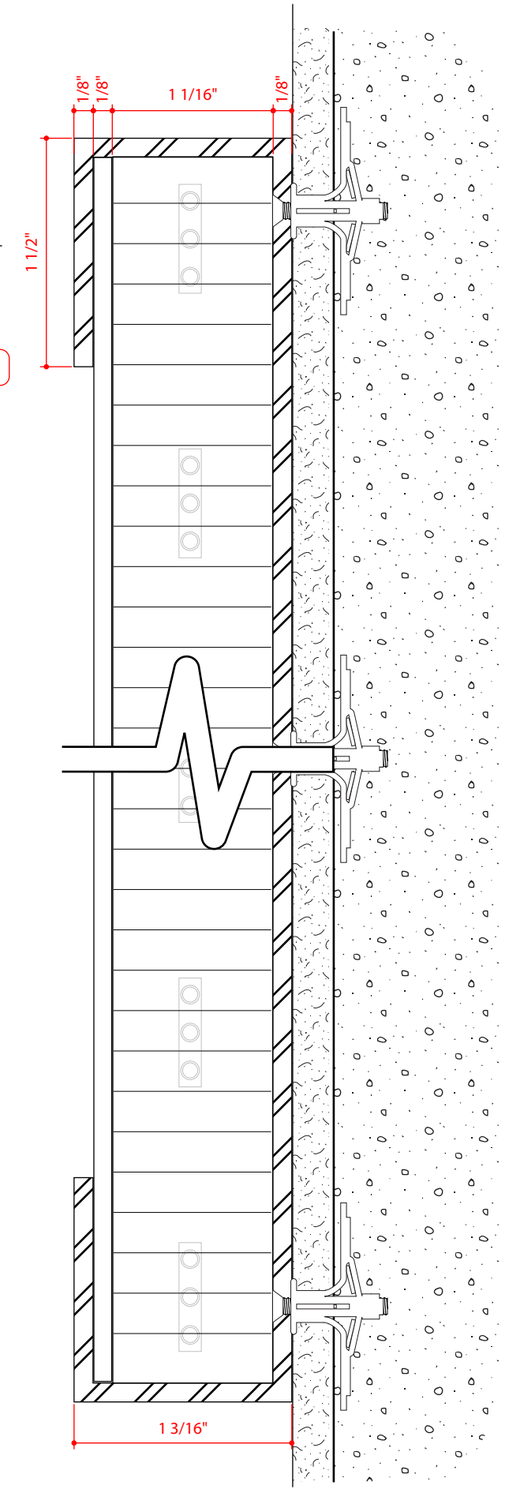

4 SIGN TYPE 26
VERTICAL SECTION

SCALE: FULL

DRAWN BY	CHECKED BY
MICHAEL MARTIN	BARBARA MARTIN

ISSUED FOR / DATE

CONSTRUCTION DOCUMENTS 09-15-10

REVISION NUMBER

DRAWING TITLE

SIGN TYPE 26 - DONOR WALL / ATHLETIC ENDOWMENTS

NOTES

LAYOUT AND NAMES TO BE DETERMINED & APPLIED SECOND SURFACE

OWNER

INDIANA UNIVERSITY OF PENNSYLVANIA
INDIANA, PA

APPROVAL / DATE

___-___-___

PROJECT NUMBER

1004.05

SIGN TYPE	SHEET NO.
26	14

KMA DESIGN
135 TECHNOLOGY DRIVE, SUITE 401 - CANONSBURG, PA 15317 VOICE 724.745.8601 FAX 724.745.8607 WWW.THEKMAGROUP.COM

©2010 KMA DESIGN

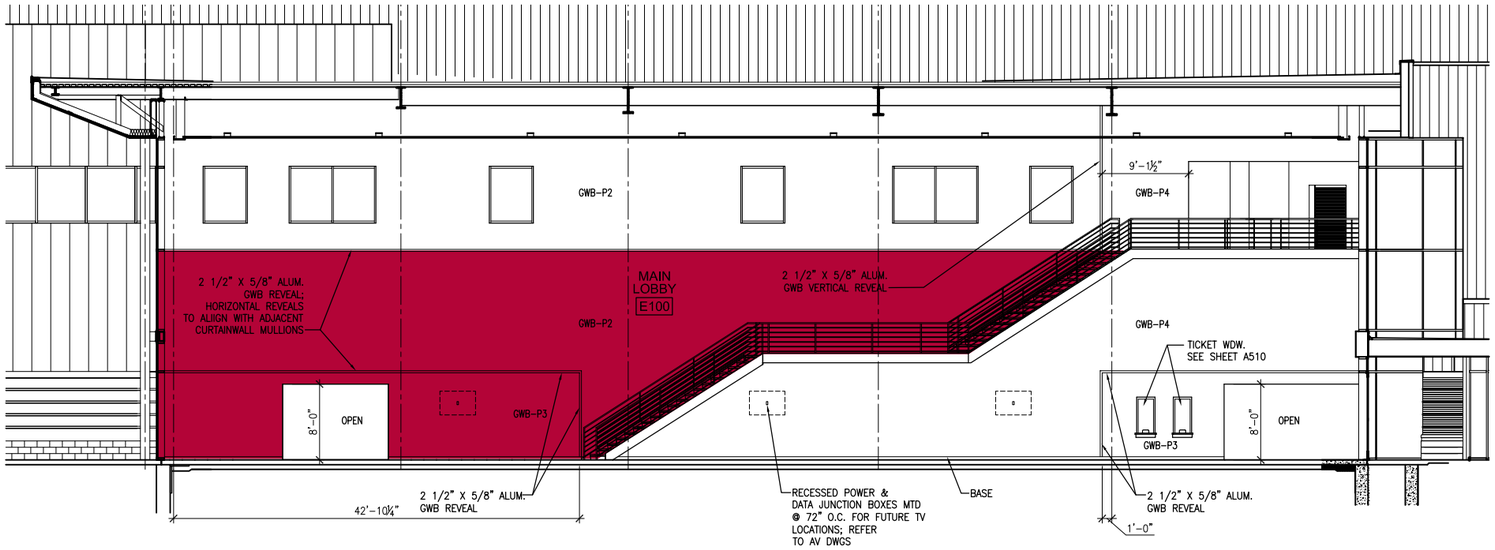

1 SIGN TYPE 25 - MAIN STAIRCASE SUPER GRAPHICS
ELEVATION

SCALE: 1/16" = 1'-0"

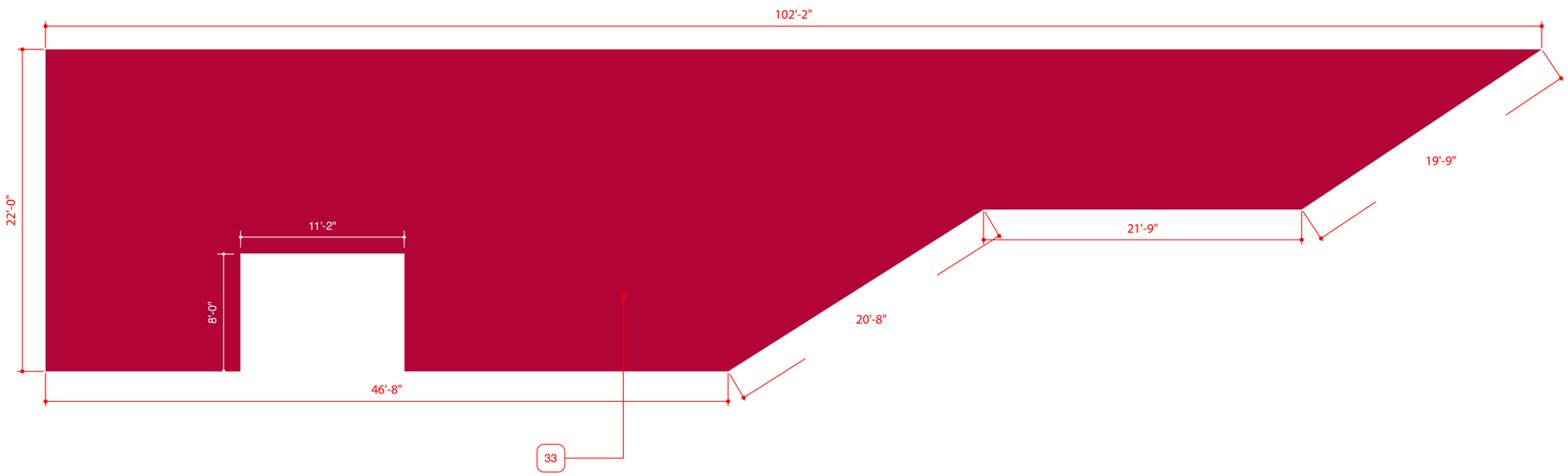

2 SIGN TYPE 25 - MAIN STAIRCASE SUPER GRAPHICS - FULL COLOR
ELEVATION

SCALE: 1/8" = 1'-0"

DRAWN BY	CHECKED BY
MICHAEL MARTIN	BARBARA MARTIN

ISSUED FOR / DATE

CONSTRUCTION DOCUMENTS 09-15-10

REVISION NUMBER

DRAWING TITLE

SIGN TYPE 25 - MAIN STAIRCASE SUPERGRAPHICS

NOTES

FINAL IMAGES / GRAPHICS TO BE DETERMINED

IMAGE TO REPRESENT GRAPHIC (FULL COLOR)

OWNER

INDIANA UNIVERSITY OF PENNSYLVANIA
INDIANA, PA

APPROVAL / DATE

___-___-___ _____

PROJECT NUMBER

1004.05

SIGN TYPE	SHEET NO.
25	15

KMA DESIGN
135 TECHNOLOGY DRIVE, SUITE 401 - CANONSBURG, PA 15317 VOICE 724.745.8601 FAX 724.745.8607 WWW.THEKMAGROUP.COM

©2010 KMA DESIGN

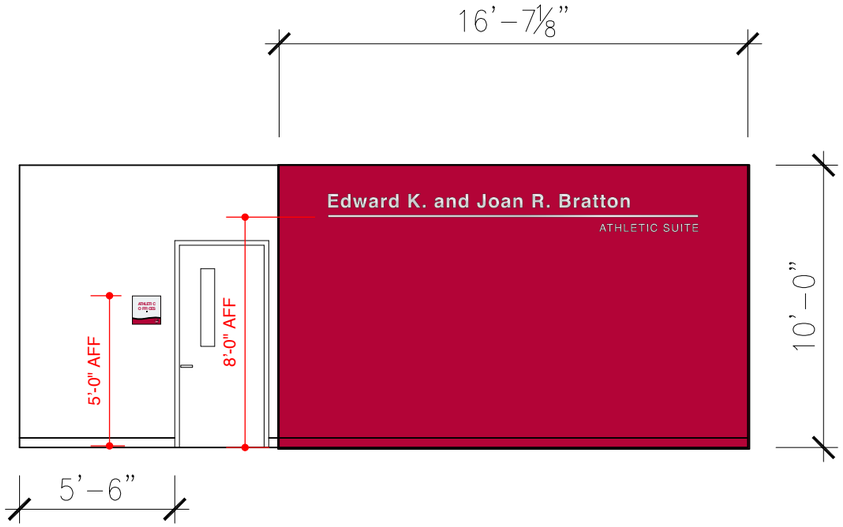

1 SIGN TYPE 19 - ATHLETIC ADMIN. AREA GRAPHIC - FULL COLOR
ELEVATION
SCALE: 3/16" = 1'-0"

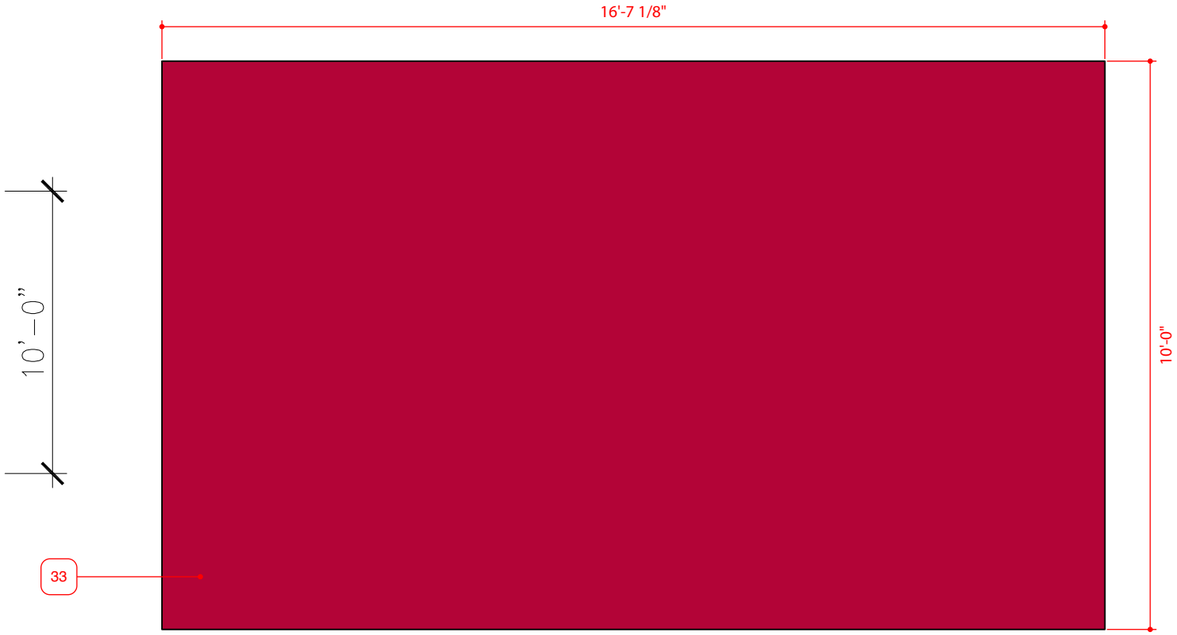

2 SIGN TYPE 19 - ATHLETIC ADMIN. AREA GRAPHIC - FULL COLOR
ELEVATION ENLARGEMENT
SCALE: 3/8" = 1'-0"

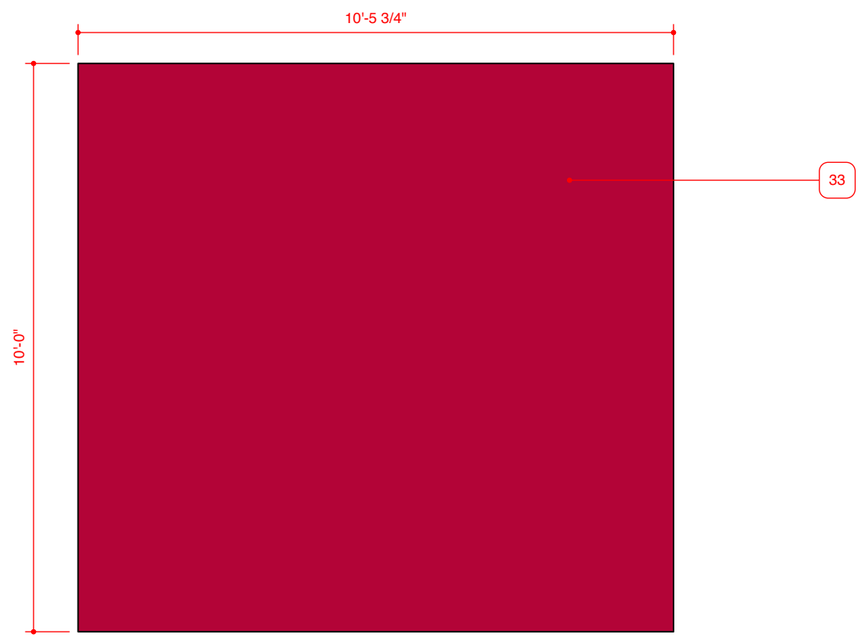

3 SIGN TYPE 20 - ATHLETIC ADMIN. AREA GRAPHIC (INSIDE OFFICE SPACE - ARCHITECTURAL ELEVATION NOT AVAILABLE, REFER TO LOCATION PLANS FOR PLACEMENT) - FULL COLOR
ELEVATION
SCALE: 3/8" = 1'-0"

DRAWN BY	CHECKED BY
MICHAEL MARTIN	BARBARA MARTIN

ISSUED FOR / DATE

CONSTRUCTION DOCUMENTS 09-15-10

REVISION NUMBER

DRAWING TITLE

SIGN TYPE 19/20 - ATHLETIC ADMIN AREA GRAPHIC

NOTES

FINAL IMAGES / GRAPHICS TO BE DETERMINED

IMAGE TO REPRESENT GRAPHIC (FULL COLOR)

OWNER

INDIANA UNIVERSITY OF PENNSYLVANIA
INDIANA, PA

APPROVAL / DATE

___-___-___ _____

PROJECT NUMBER

1004.05

SIGN TYPE	SHEET NO.
19, 20	16

KMA DESIGN
135 TECHNOLOGY DRIVE, SUITE 401 - CANONSBURG, PA 15317 VOICE 724.745.8601 FAX 724.745.8607 WWW.THEKMAGROUP.COM

©2010 KMA DESIGN

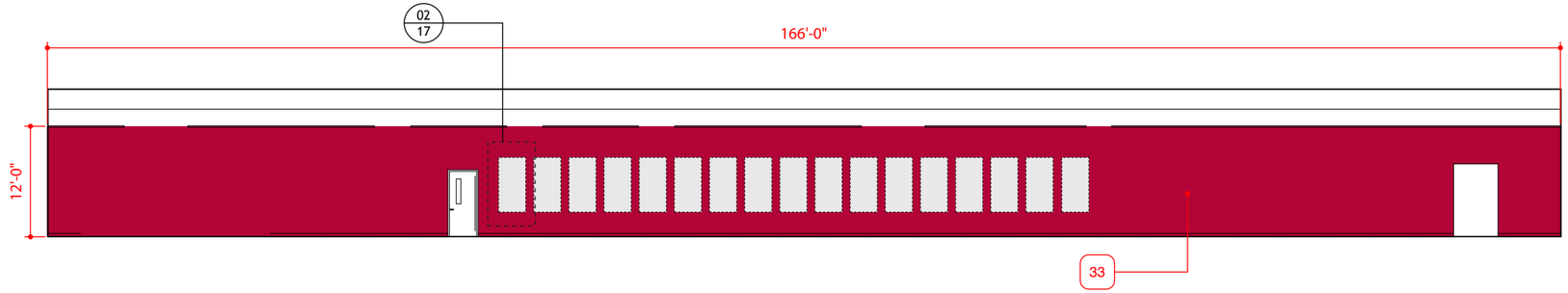

1 SIGN TYPE 17 - HALL OF FAME WALL SUPER GRAPHIC ELEVATION

SCALE: 1/16" = 1'-0"

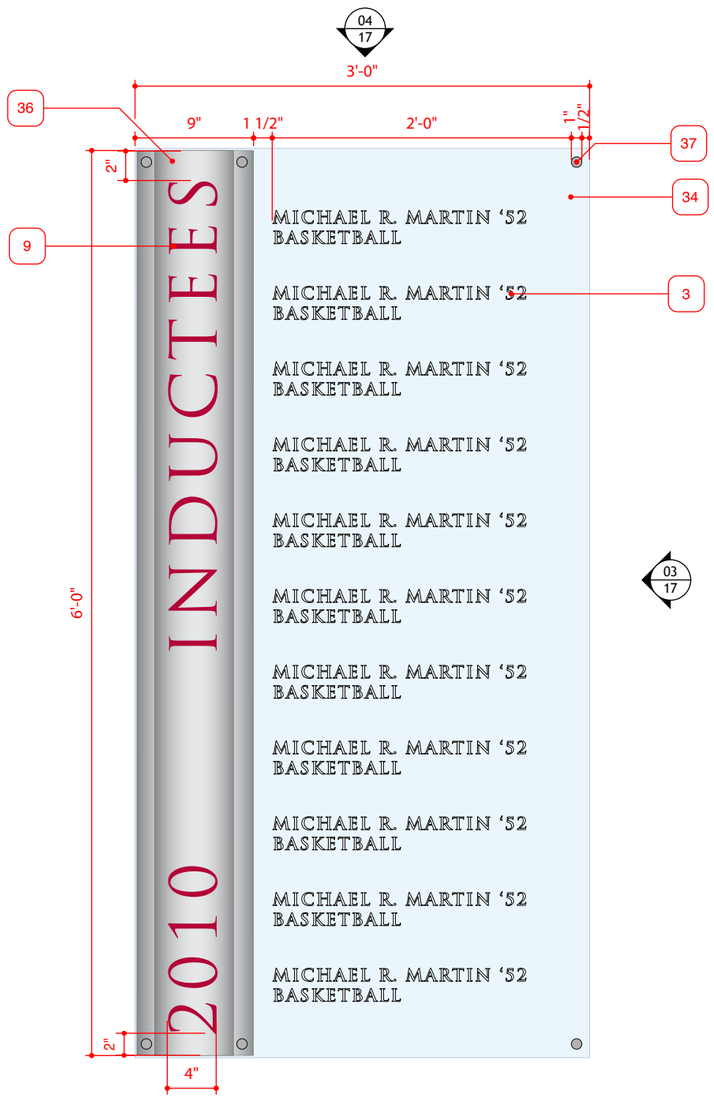

2 SIGN TYPE 17.1 - HALL OF FAME WALL INDUCTEE PANEL ELEVATION

SCALE: 1" = 1'-0"

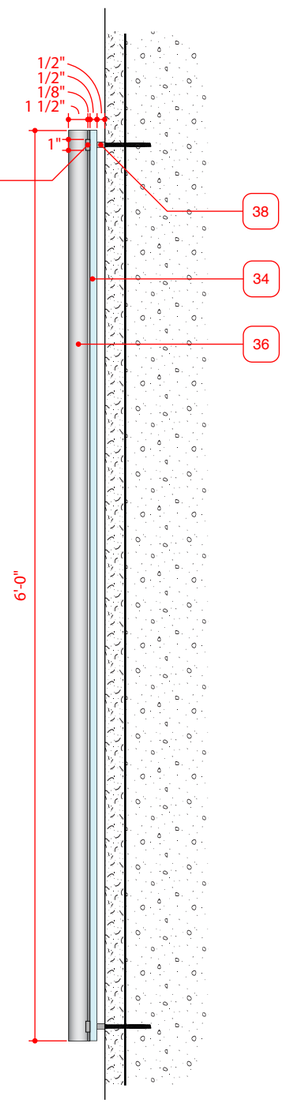

3 SIGN TYPE 17.1 END VIEW

SCALE: 1" = 1'-0"

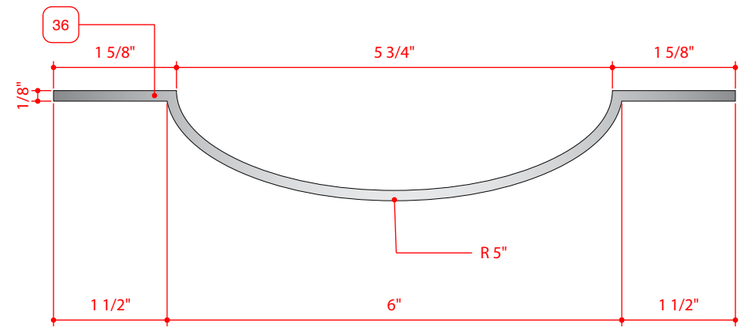

4 SIGN TYPE 17.1 PLAN VIEW / PANEL NAME ENLARGEMENT DETAIL

SCALE: 1/2" = 1"

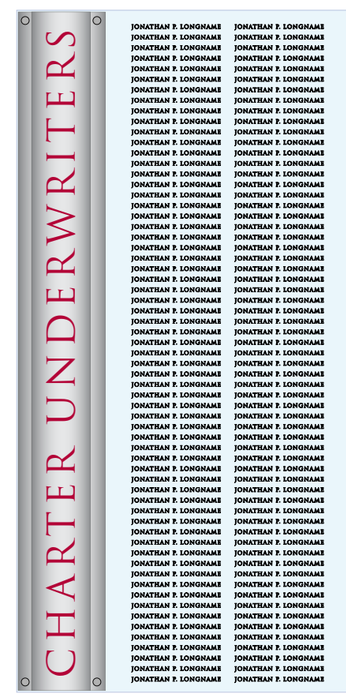

5 SIGN TYPE 2-17.1-01 - CHARTER UNDERWRITERS ELEVATION

SCALE: NTS

DRAWN BY	CHECKED BY
MICHAEL MARTIN	BARBARA MARTIN

ISSUED FOR / DATE

CONSTRUCTION DOCUMENTS 09-15-10

REVISION NUMBER

DRAWING TITLE

SIGN TYPE 17-17.1 - HALL OF FAME WALL

NOTES

FINAL GRAPHICS TO BE DETERMINED

IMAGE TO REPRESENT GRAPHIC (FULL COLOR)

OWNER

INDIANA UNIVERSITY OF PENNSYLVANIA
INDIANA, PA

APPROVAL / DATE

___-___-___ _____

PROJECT NUMBER

1004.05

SIGN TYPE	SHEET NO.
17,17.1	17

KMA DESIGN
135 TECHNOLOGY DRIVE, SUITE 401 - CANONSBURG, PA 15317 VOICE 724.745.8601 FAX 724.745.8607 WWW.THEKMAGROUP.COM

©2010 KMA DESIGN

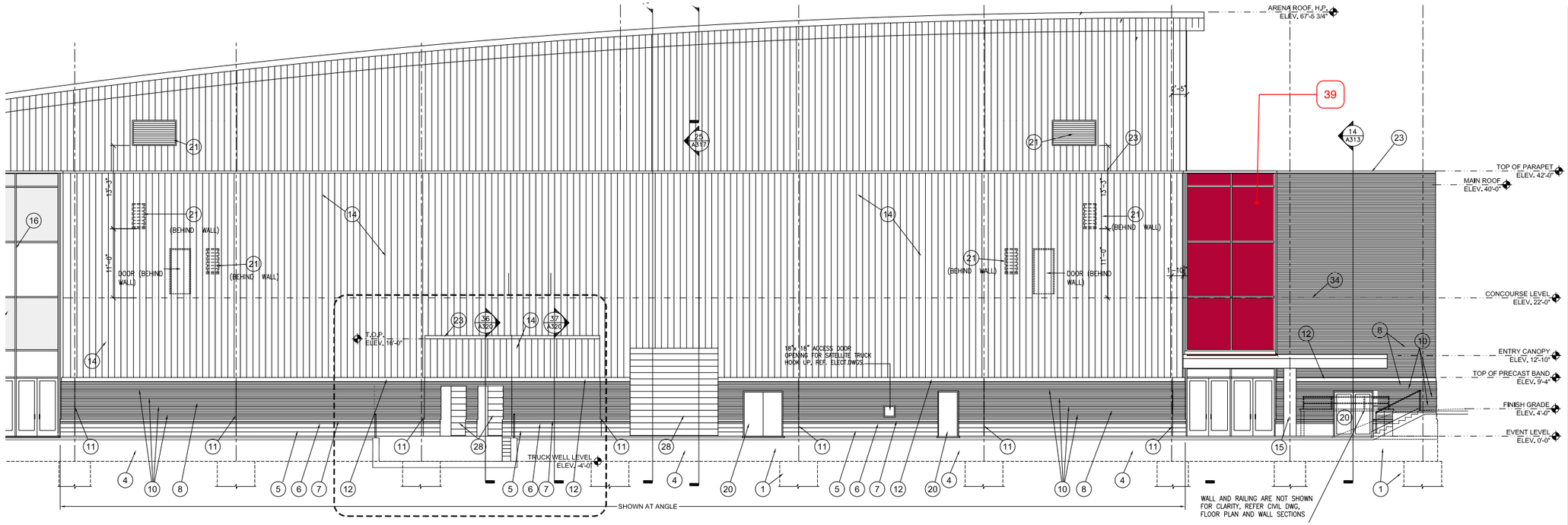

1 SIGN TYPE 24 - STUDENT ENTRY SUPER GRAPHIC - FULL COLOR
ELEVATION

SCALE: 1/16" = 1'-0"

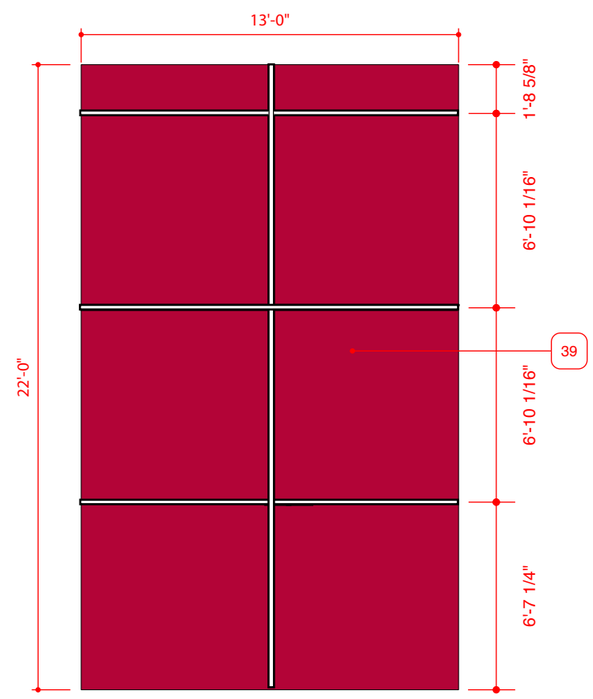

2 SIGN TYPE 24 - STUDENT ENTRY SUPER GRAPHIC - FULL COLOR
ELEVATION

SCALE: 3/16" = 1'-0"

DRAWN BY	CHECKED BY
MICHAEL MARTIN	BARBARA MARTIN

ISSUED FOR / DATE

CONSTRUCTION DOCUMENTS 09-15-10

REVISION NUMBER

DRAWING TITLE

SIGN TYPE 24 - STUDENT ENTRY WINDOW SUPER GRAPHIC

NOTES

FINAL IMAGES / GRAPHICS TO BE DETERMINED

FINAL WINDOW DIMENSIONS TO BE FIELD VERIFIED BY FABRICATOR

OWNER

INDIANA UNIVERSITY OF PENNSYLVANIA
INDIANA, PA

APPROVAL / DATE

___-___-___ _____

PROJECT NUMBER

1004.05

SIGN TYPE	SHEET NO.
24	18

KMA DESIGN
135 TECHNOLOGY DRIVE, SUITE 401 - CANONSBURG, PA 15317 VOICE 724.745.8601 FAX 724.745.8607 WWW.THEKMAGROUP.COM

©2010 KMA DESIGN

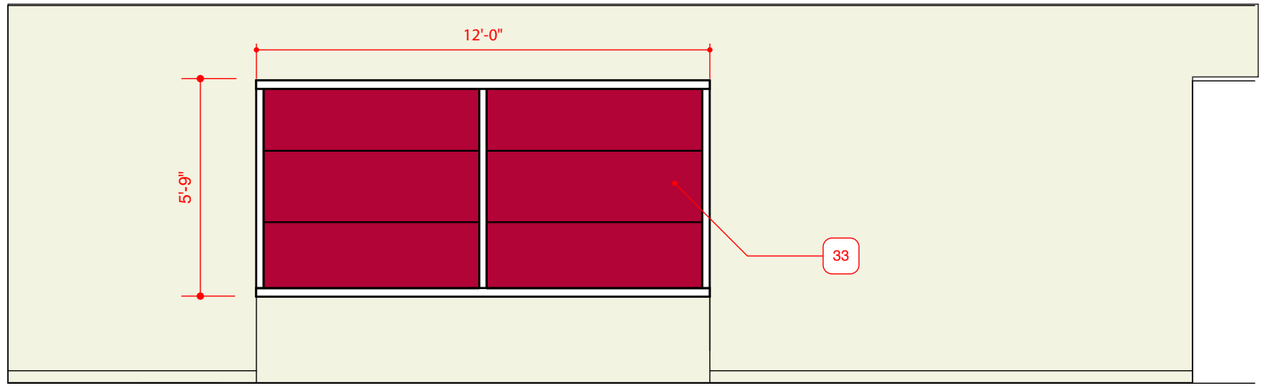

1 SIGN TYPE 18 - TROPHY CASE GRAPHIC
ELEVATION

SCALE: 1/4" = 1'-0"

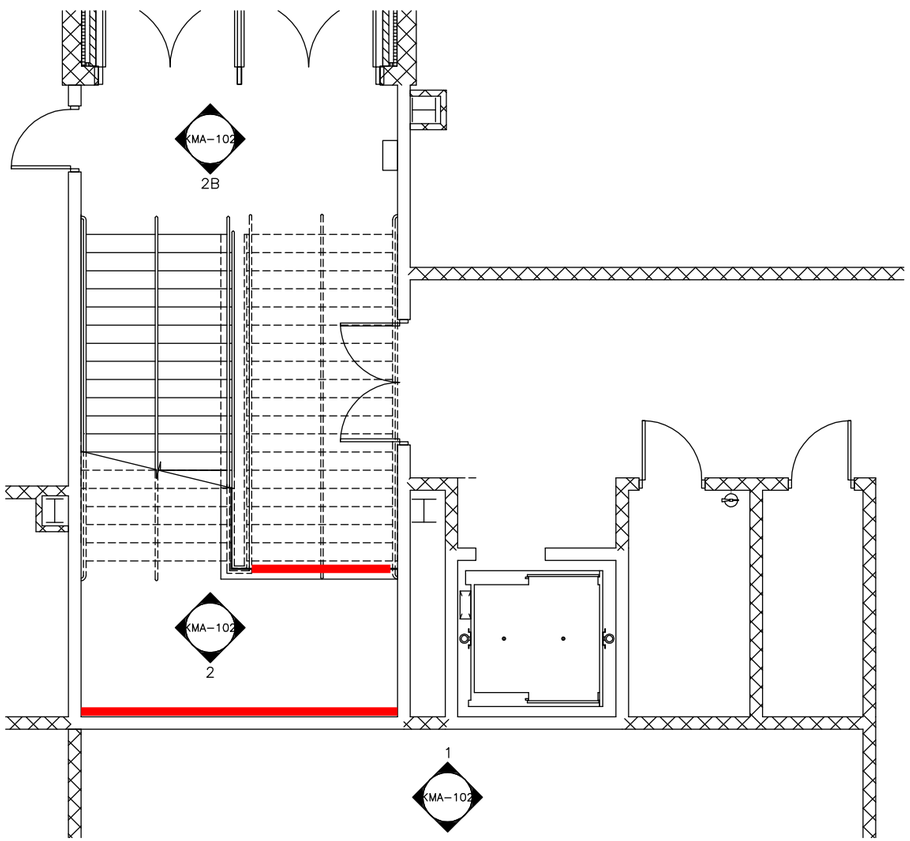

3 B122 EVENT FLOOR PLAN

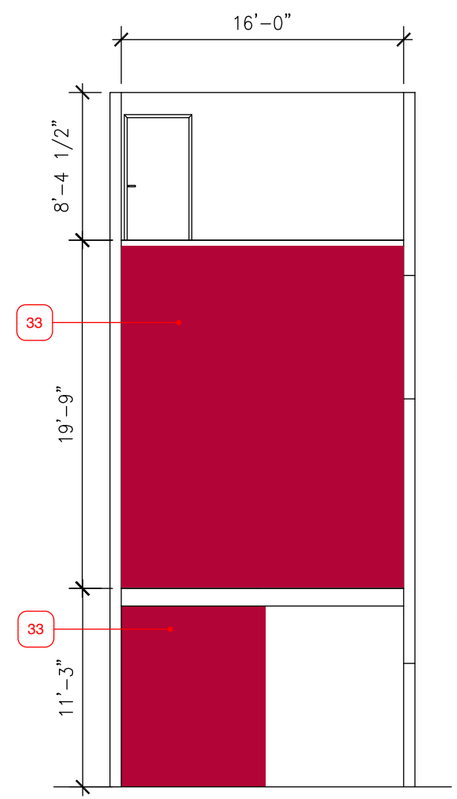

2 B122 WALL ELEVATION

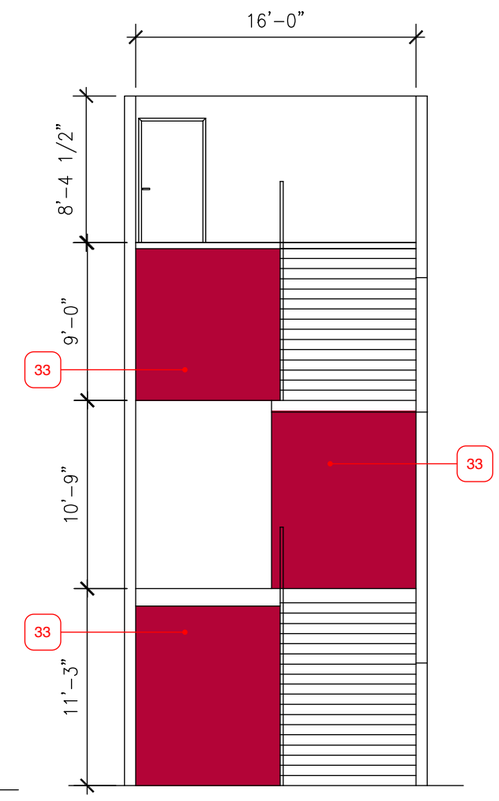

2B B122 WALL ELEVATION-SHOWING STAIRS

2 SIGN TYPE 15 - STUDENT STAIRWELL SUPER GRAPHIC - FULL COLOR
PLAN DETAIL

SCALE: NTS

3 SIGN TYPE 15 - STUDENT STAIRWELL SUPER GRAPHIC - FULL COLOR
ELEVATION

SCALE: 1/8" = 1'-0"

DRAWN BY	CHECKED BY
MICHAEL MARTIN	BARBARA MARTIN

ISSUED FOR / DATE

CONSTRUCTION DOCUMENTS 09-15-10

REVISION NUMBER

DRAWING TITLE

SIGN TYPE 15 - STUDENT STAIRWELL SUPER GRAPHIC
SIGN TYPE 18 - TROPHY CASE GRAPHIC

NOTES

FINAL IMAGES / GRAPHICS TO BE DETERMINED

RED REPRESENTS WALL GRAPHIC ON SPECIFIED ELEVATIONS

TROPHY CASE GRAPHIC WILL BE INTERUPTED BY ACCESS DOOR. LOCATION TO BE DETERMINED

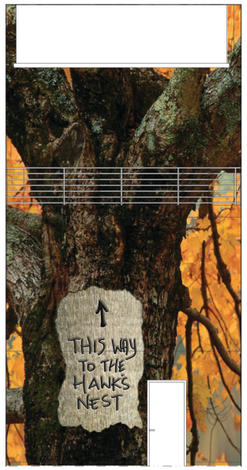

OWNER

INDIANA UNIVERSITY OF PENNSYLVANIA
INDIANA, PA

APPROVAL / DATE

___-___-___ _____

PROJECT NUMBER

1004.05

SIGN TYPE	SHEET NO.
15, 18	19

KMA DESIGN
135 TECHNOLOGY DRIVE, SUITE 401 - CANONSBURG, PA 15317 VOICE 724.745.8601 FAX 724.745.8607 WWW.THEKMAGROUP.COM

©2010 KMA DESIGN

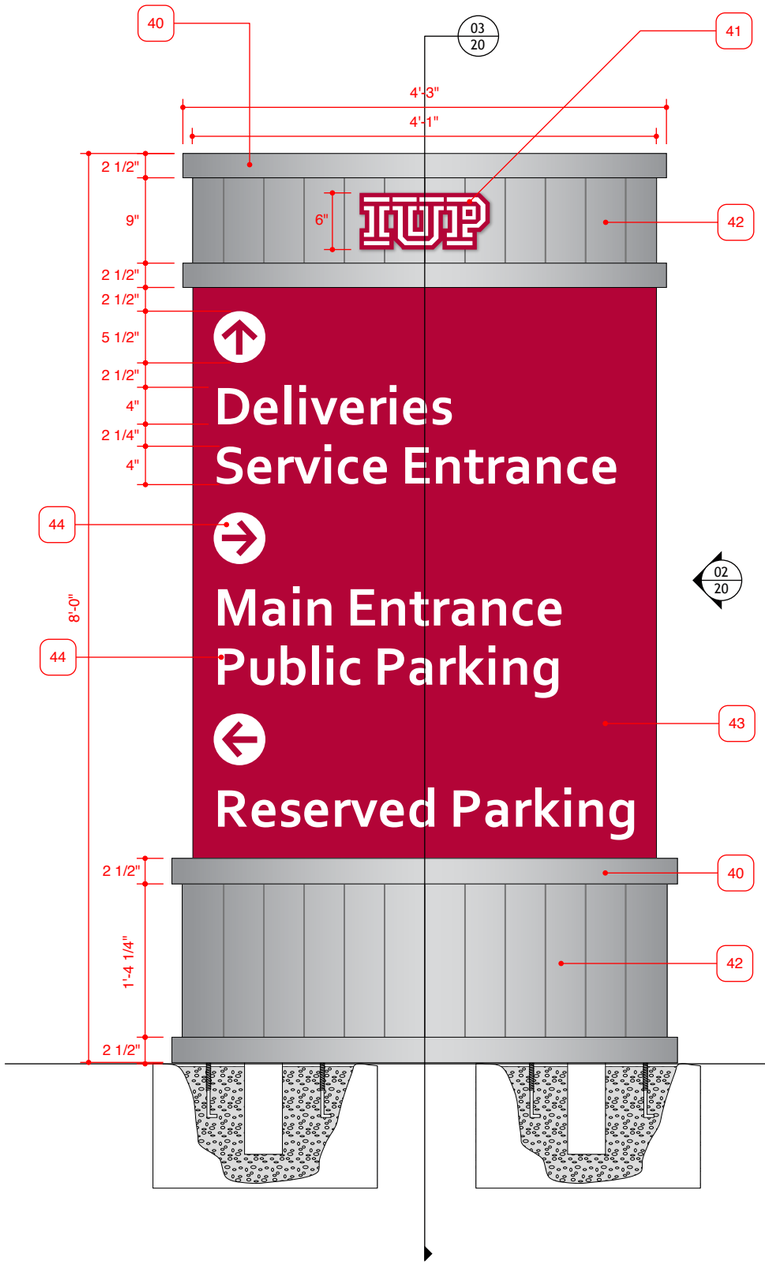

1 SIGN TYPE S6 - EXTERIOR DIRECTIONAL ELEVATION SCALE: 3/4" = 1'-0"

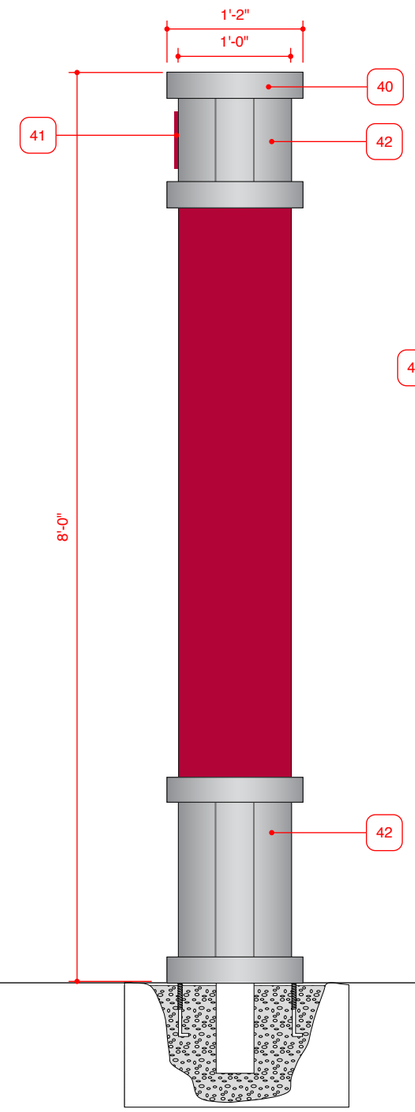

2 SIGN TYPE S6 - EXT. DIRECTIONAL END VIEW SCALE: 3/4" = 1'-0"

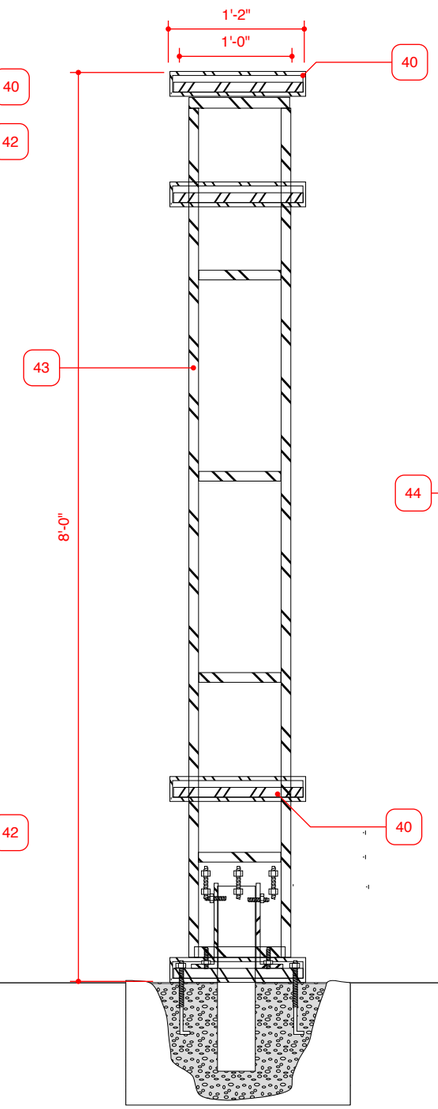

3 SIGN TYPE S6 - EXT. DIRECTIONAL SECTION SCALE: 3/4" = 1'-0"

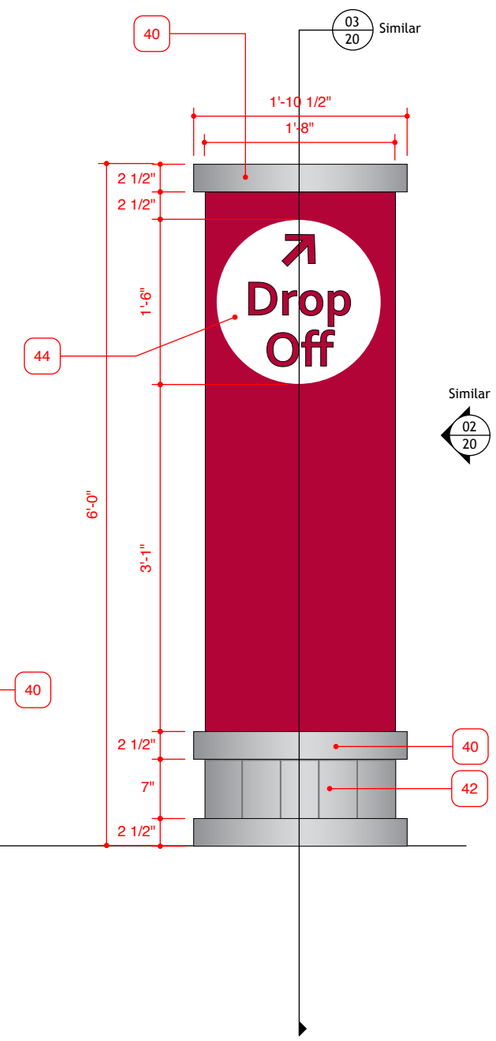

4 SIGN TYPE S9 - DROP OFF I.D. ELEVATION SCALE: 3/4" = 1'-0"

DRAWN BY	CHECKED BY
MICHAEL MARTIN	BARBARA MARTIN

ISSUED FOR / DATE

CONSTRUCTION DOCUMENTS 09-15-10

REVISION NUMBER

DRAWING TITLE

SIGN TYPE S6 - EXTERIOR DIRECTIONAL
SIGN TYPE S9 - DROP OFF IDENTIFICATION

NOTES

OWNER

INDIANA UNIVERSITY OF PENNSYLVANIA
INDIANA, PA

APPROVAL / DATE

___-___-___ _____

PROJECT NUMBER

1004.05

SIGN TYPE	SHEET NO.
S6, S9	20

KMA DESIGN
135 TECHNOLOGY DRIVE, SUITE 401 - CANONSBURG, PA 15317 VOICE 724.745.8601 FAX 724.745.8607 WWW.THEKMAGROUP.COM

©2010 KMA DESIGN

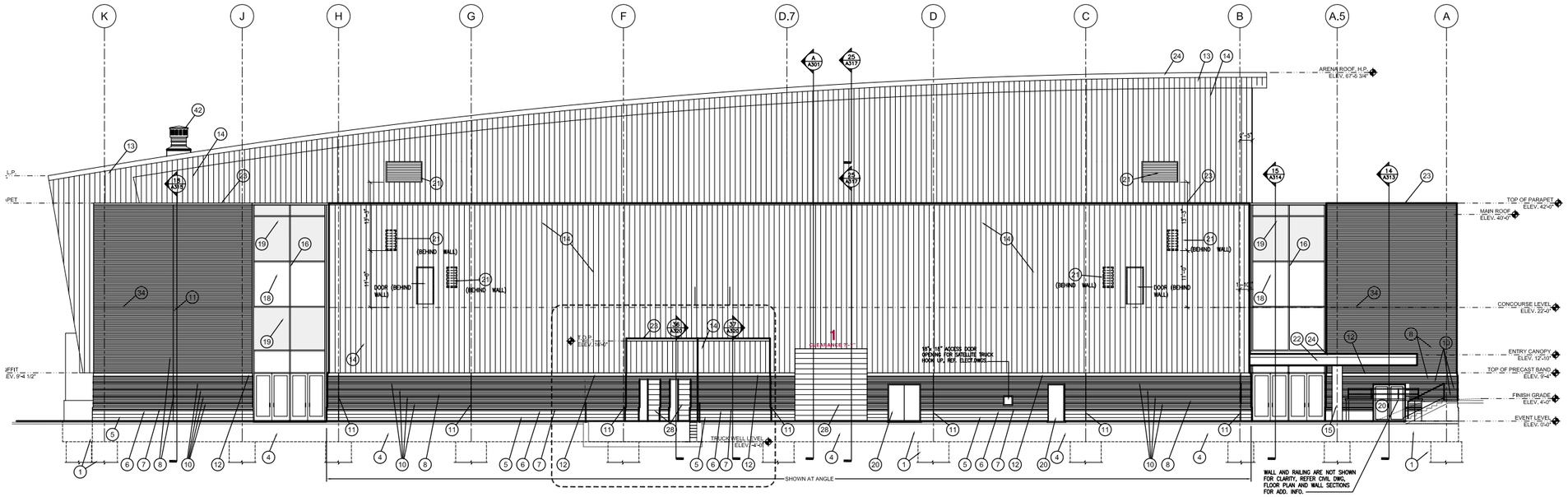

1 SIGN TYPE S1/S5 - CUT-OUT LETTERS
ELEVATION

SCALE: NTS

2 SIGN TYPE S5 - CLEARANCE I.D. CUT-OUT LETTERS
ELEVATION

SCALE: 1/4" = 1"

3 SIGN TYPE S1 - LOADING DOCK CUT-OUT NUMBERS
ELEVATION

SCALE: 1/8" = 1"

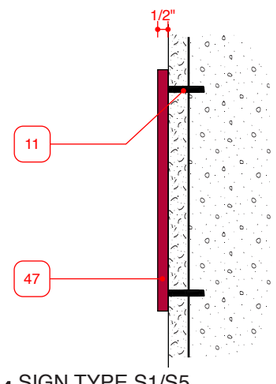

4 SIGN TYPE S1/S5
END VIEW

SCALE: 1/8" = 1"

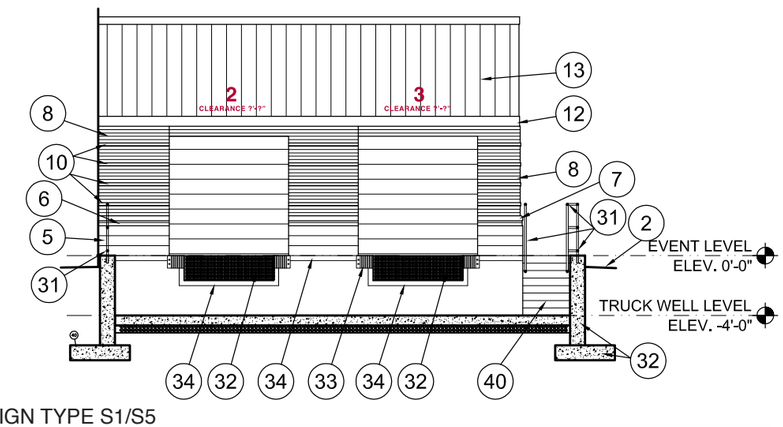

5 SIGN TYPE S1/S5
ELEVATION

SCALE: NTS

DRAWN BY	CHECKED BY
MICHAEL MARTIN	BARBARA MARTIN

ISSUED FOR / DATE

CONSTRUCTION DOCUMENTS 09-15-10

REVISION NUMBER

DRAWING TITLE

SIGN TYPE S1 - LOADING DOCK NUMBERS
SIGN TYPE S5 -CLEARANCE LETTERS

NOTES

OWNER

INDIANA UNIVERSITY OF PENNSYLVANIA
INDIANA, PA

APPROVAL / DATE

___-___-___

PROJECT NUMBER

1004.05

SIGN TYPE	SHEET NO.
S1,S5	21

KMA DESIGN
135 TECHNOLOGY DRIVE, SUITE 401 - CANONSBURG, PA 15317 VOICE 724.745.8601 FAX 724.745.8607 WWW.THEKMAGROUP.COM

©2010 KMA DESIGN

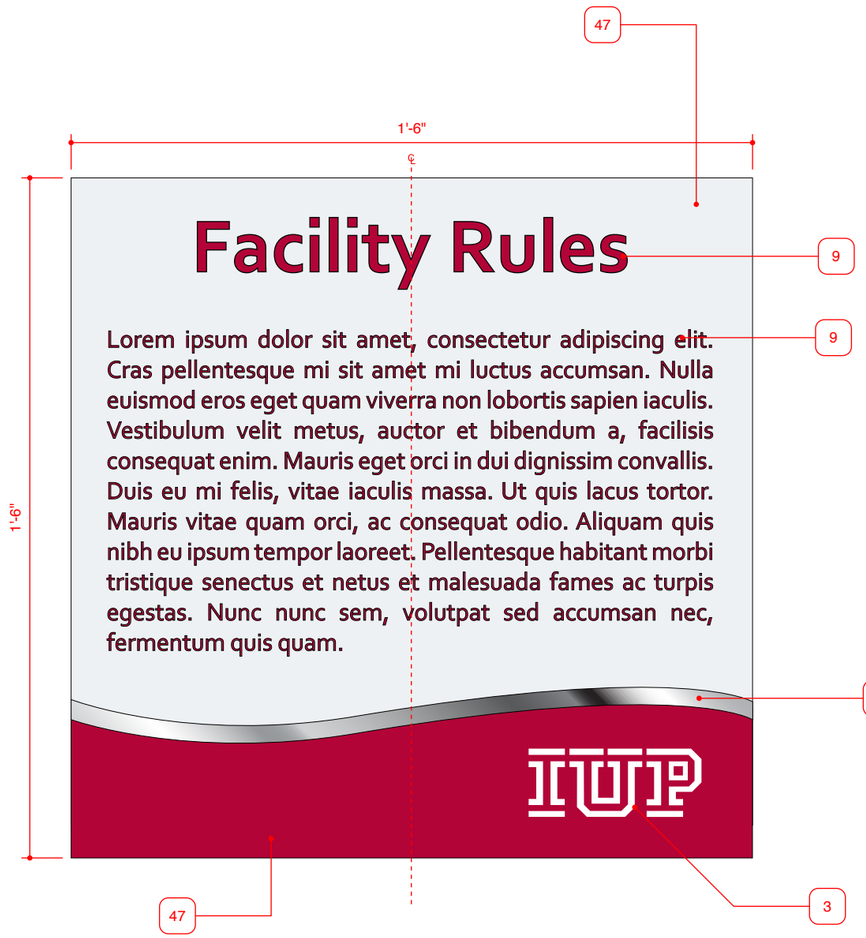

1 SIGN TYPE S2 - FACILITY RULES
ELEVATION

SCALE: 1/4" = 1"

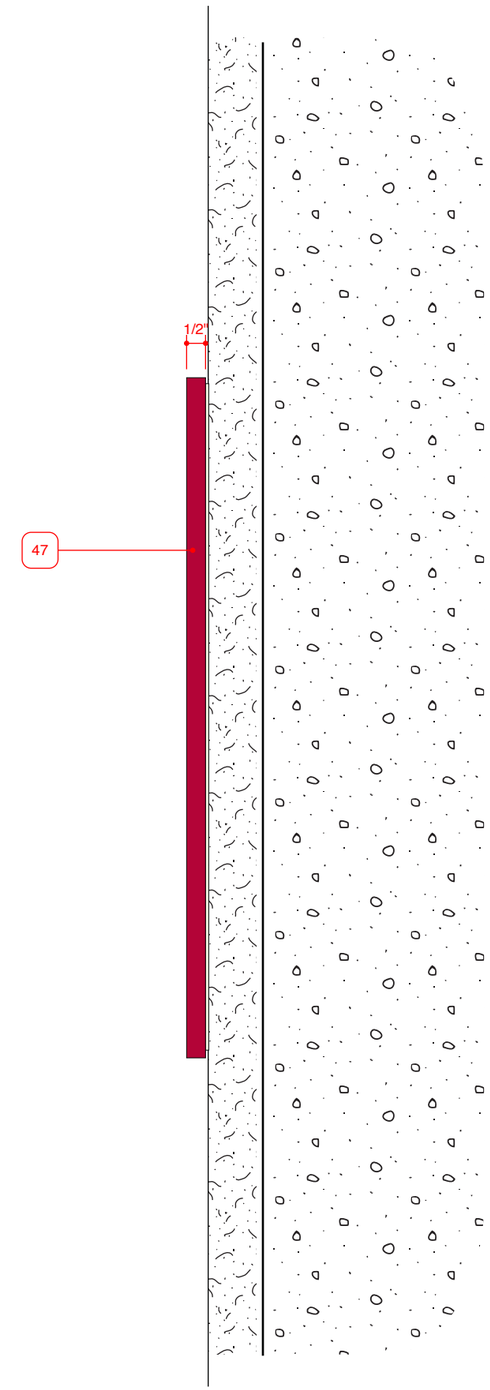

2 SIGN TYPE S2 FACILITY RULES
END VIEW

SCALE: 1/4" = 1"

DRAWN BY	CHECKED BY
MICHAEL MARTIN	BARBARA MARTIN

ISSUED FOR / DATE

CONSTRUCTION DOCUMENTS 09-15-10

REVISION NUMBER

DRAWING TITLE

SIGN TYPE S2 - FACILITY RULES

NOTES

FINAL TEXT AND CAP HEIGHTS T.B.D.

OWNER

INDIANA UNIVERSITY OF PENNSYLVANIA
INDIANA, PA

APPROVAL / DATE

___-___-___ _____

PROJECT NUMBER

1004.05

SIGN TYPE	SHEET NO.
S2	22

KMA DESIGN
135 TECHNOLOGY DRIVE, SUITE 401 - CANONSBURG, PA 15317 VOICE 724.745.8601 FAX 724.745.8607 WWW.THEKMAGROUP.COM

©2010 KMA DESIGN

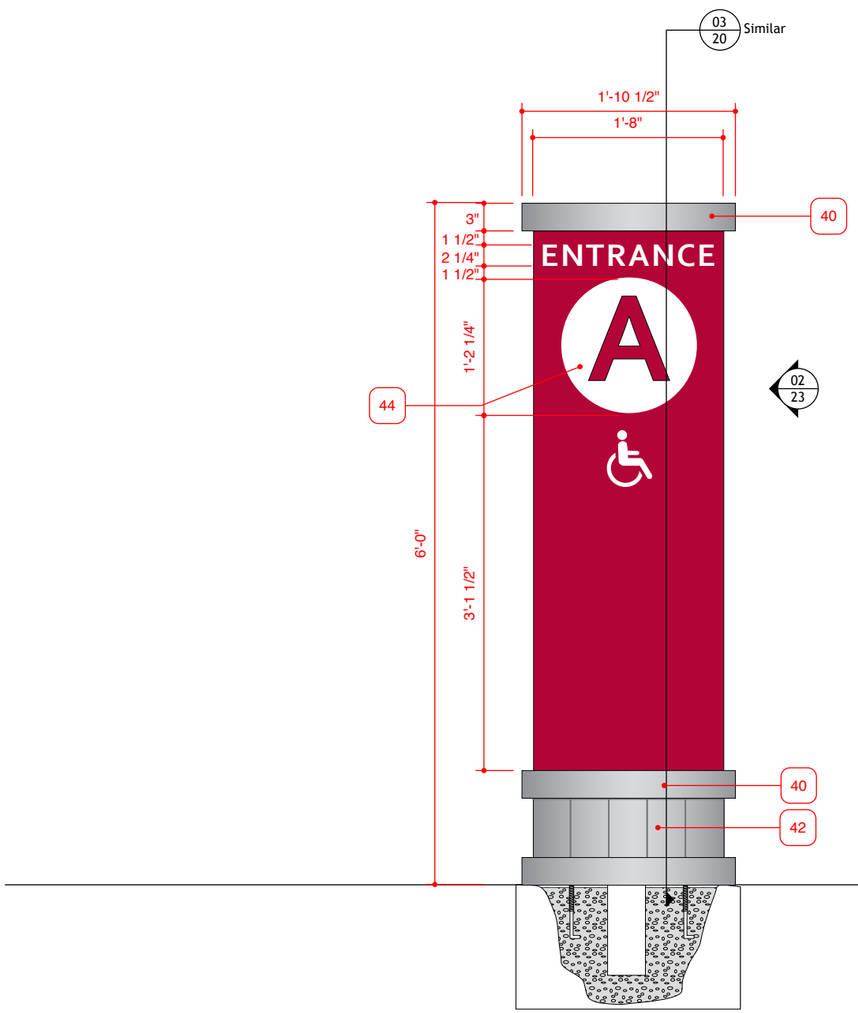

1 SIGN TYPE S3 - EXTERIOR ENTRANCE IDENTIFICATION
ELEVATION

SCALE: 3/4" = 1'-0"

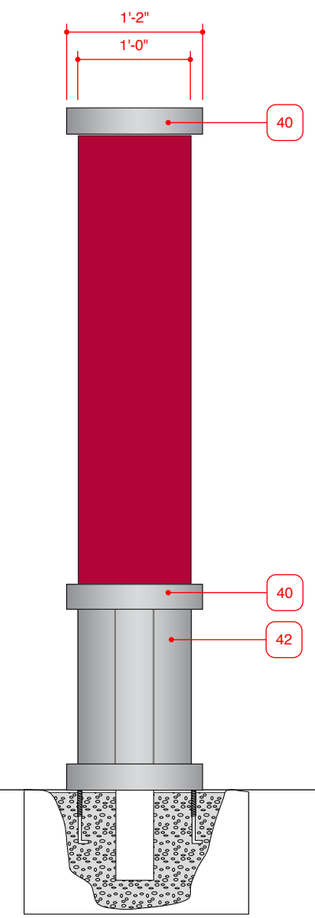

2 SIGN TYPE S3 - EXTERIOR ENTRANCE IDENTIFICATION
ELEVATION

SCALE: 3/4" = 1'-0"

DRAWN BY	CHECKED BY
MICHAEL MARTIN	BARBARA MARTIN

ISSUED FOR / DATE

CONSTRUCTION DOCUMENTS 09-15-10

REVISION NUMBER

DRAWING TITLE

SIGN TYPE S3 - ENTRANCE IDENTIFICATION

NOTES

OWNER

INDIANA UNIVERSITY OF PENNSYLVANIA
INDIANA, PA

APPROVAL / DATE

___-___-___ _____

PROJECT NUMBER

1004.05

SIGN TYPE	SHEET NO.
S3	23

KMA DESIGN
135 TECHNOLOGY DRIVE, SUITE 401 - CANONSBURG, PA 15317 VOICE 724.745.8601 FAX 724.745.8607 WWW.THEKMAGROUP.COM

©2010 KMA DESIGN

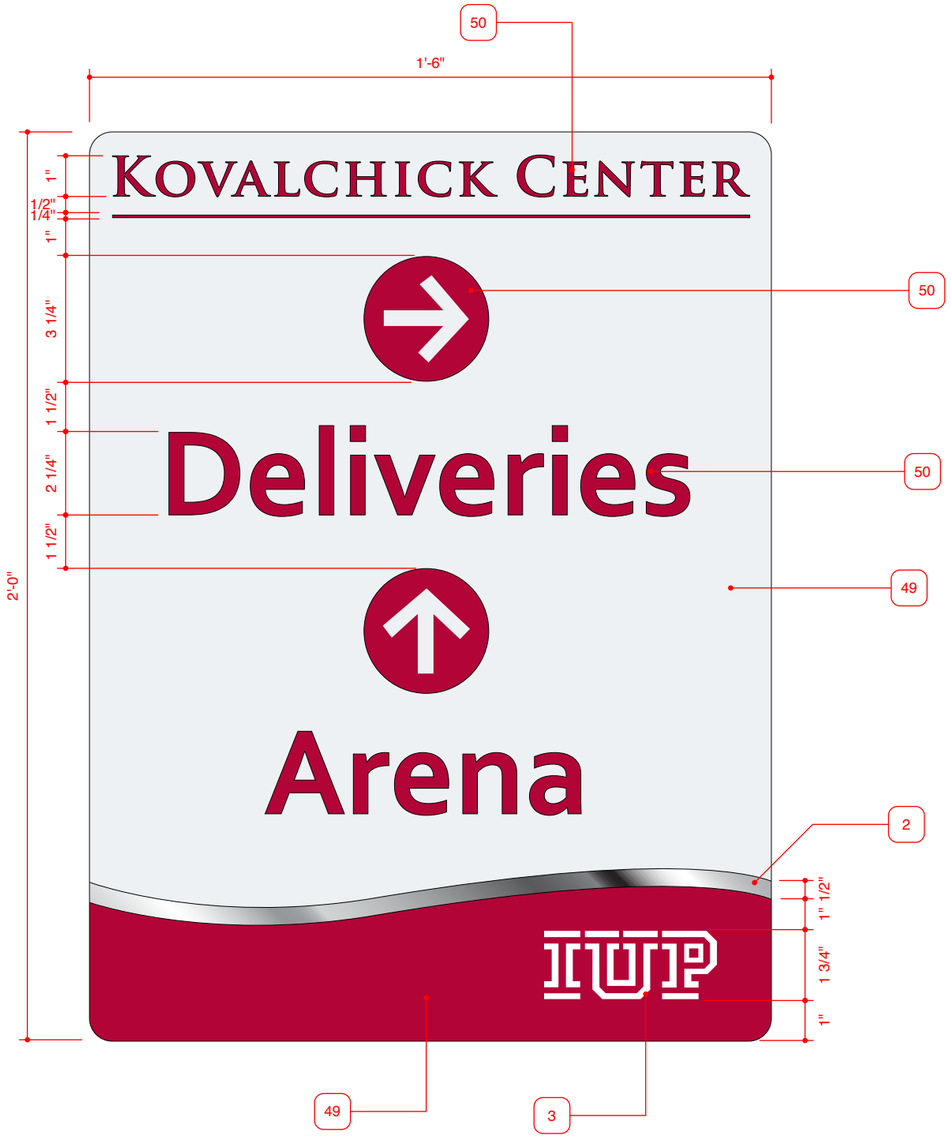

1 SIGN TYPE S7 - OFF PREMISES DIRECTIONAL ENLARGEMENT

SCALE: 1/4" = 1"

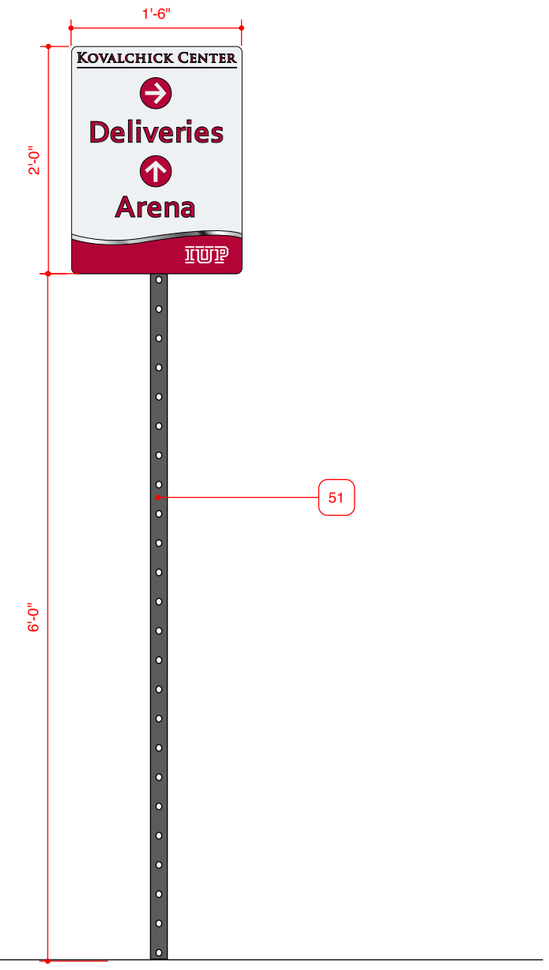

2 SIGN TYPE S3 - EXTERIOR ENTRANCE IDENTIFICATION ELEVATION

SCALE: 3/4" = 1'-0"

DRAWN BY	CHECKED BY
MICHAEL MARTIN	BARBARA MARTIN

ISSUED FOR / DATE

CONSTRUCTION DOCUMENTS 09-15-10

REVISION NUMBER

DRAWING TITLE

SIGN TYPE S7 - OFF PREMISES DIRECTIONAL

NOTES

STANDARD U-CHANNEL POLE FOR INSTALL

OWNER

INDIANA UNIVERSITY OF PENNSYLVANIA
INDIANA, PA

APPROVAL / DATE

___-___-___ _____

PROJECT NUMBER

1004.05

SIGN TYPE	SHEET NO.
S7	24

KMA DESIGN
135 TECHNOLOGY DRIVE, SUITE 401 - CANONSBURG, PA 15317 VOICE 724.745.8601 FAX 724.745.8607 WWW.THEKMAGROUP.COM

©2010 KMA DESIGN

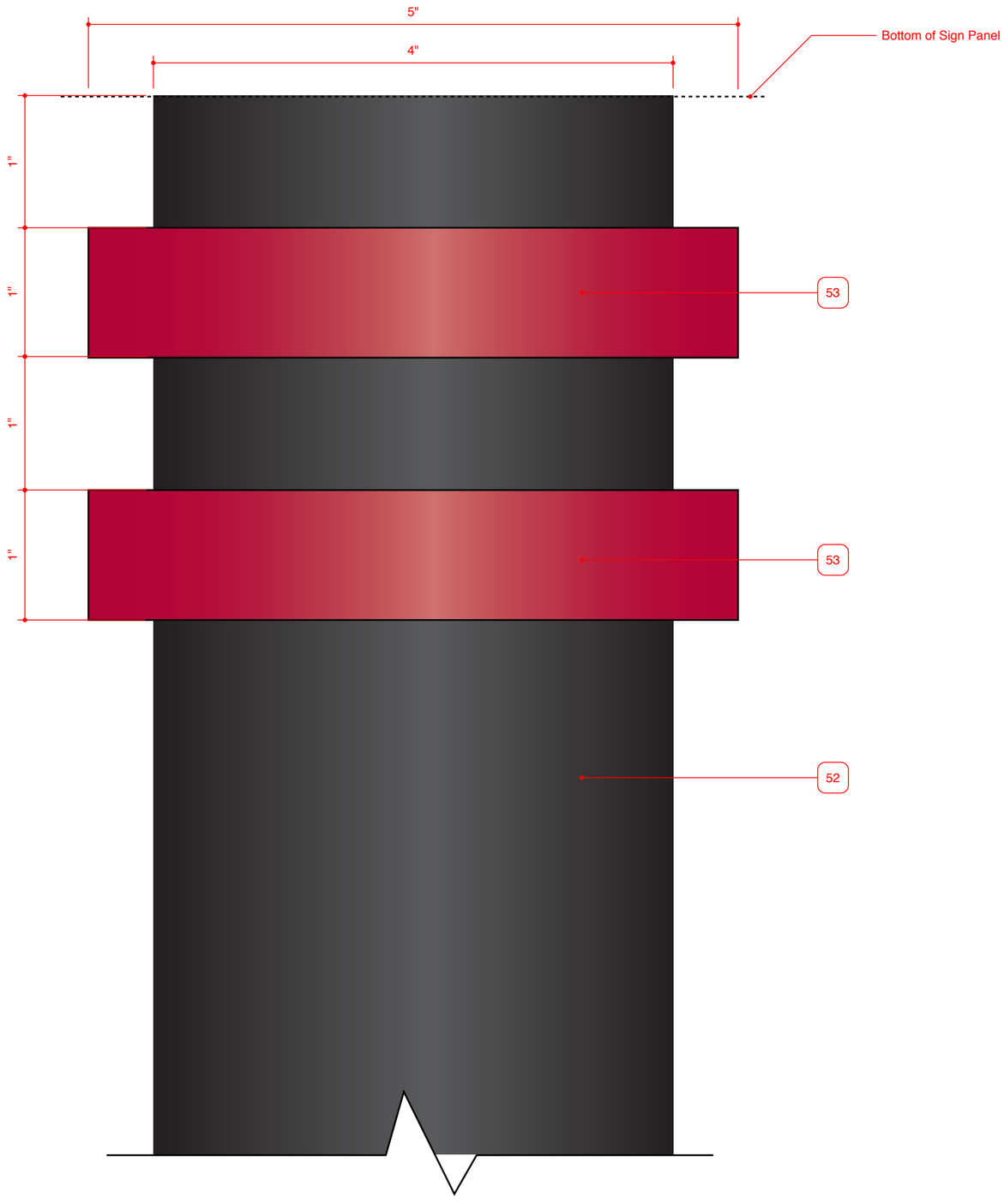

1 SIGN TYPE S8 - D.O.T. POLE
ENLARGEMENT

SCALE: 1/4" = 1"

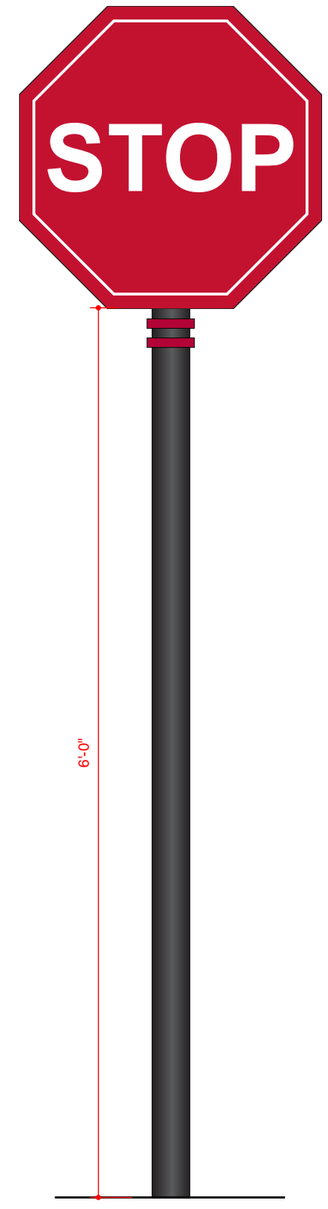

2 SIGN TYPE S8 - D.O.T. POLE
ELEVATION

SCALE: 3/4" = 1'-0"

DRAWN BY	CHECKED BY
MICHAEL MARTIN	BARBARA MARTIN

ISSUED FOR / DATE

CONSTRUCTION DOCUMENTS 09-15-10

REVISION NUMBER

DRAWING TITLE

SIGN TYPE S8 - D.O.T. POLE

NOTES

SIGN TYPES THAT APPLY INCLUDE:
8.A
8.B
8.C
8.D
8.E
8.F
8.G
8.H
8.I

OWNER

INDIANA UNIVERSITY OF PENNSYLVANIA
INDIANA, PA

APPROVAL / DATE

___-___-___ _____

PROJECT NUMBER

1004.05

SIGN TYPE	SHEET NO.
S8	25

KMA DESIGN
135 TECHNOLOGY DRIVE, SUITE 401 - CANONSBURG, PA 15317 VOICE 724.745.8601 FAX 724.745.8607 WWW.THEKMAGROUP.COM
©2010 KMA DESIGN

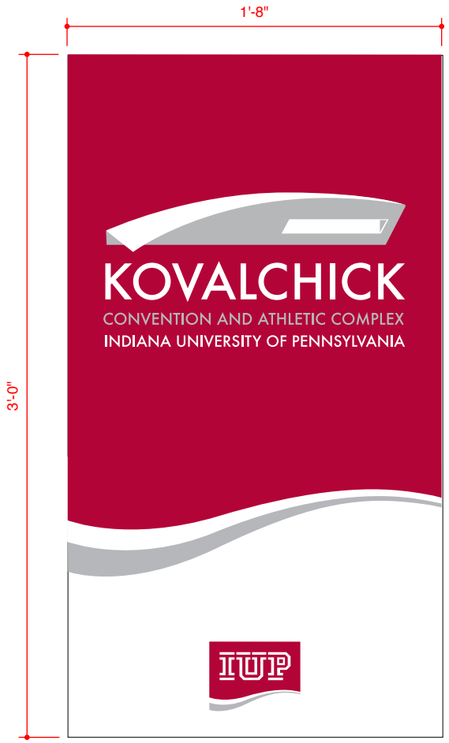

1 SIGN TYPE S11.1 - BANNER ELEVATION
SCALE: 1 1/12" = 1'-0"

2 SIGN TYPE S11.2 - BANNER ELEVATION
SCALE: 1 1/12" = 1'-0"

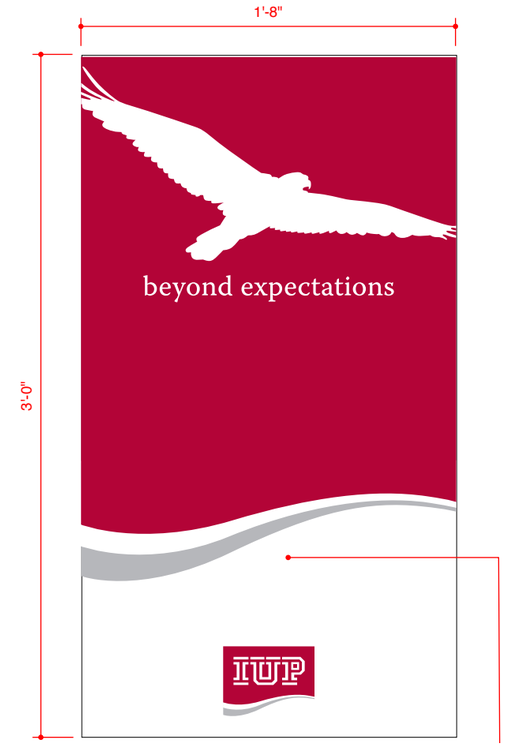

13OZ BANNER MATERIAL WITH DIGITAL PRINT AND UV CLEARCOAT
ANCHOR BANNERS TO BRACKET UTILIZING BLACK ZIP-TIES

3 SIGN TYPE S11.3 - BANNER ELEVATION
SCALE: 1 1/12" = 1'-0"

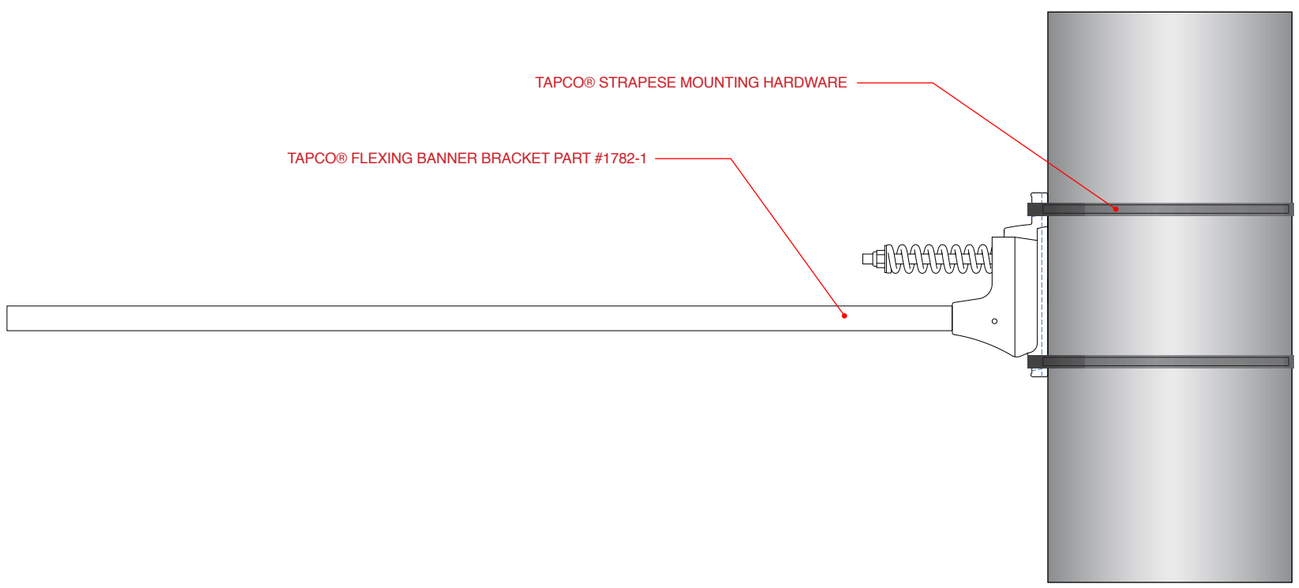

1 SIGN TYPE S11 - EXTERIOR BANNERS MOUNTING HARDWARE DETAIL
SCALE: NTS

DRAWN BY	CHECKED BY
MICHAEL MARTIN	BARBARA MARTIN

ISSUED FOR / DATE

CONSTRUCTION DOCUMENTS 09-15-10

REVISION NUMBER

DRAWING TITLE

SIGN TYPE S11 - EXTERIOR BANNERS

NOTES

4 REQUIRED PER EACH VERSION
2-SIDED

OWNER

INDIANA UNIVERSITY OF PENNSYLVANIA
INDIANA, PA

APPROVAL / DATE

___-___-___ _____

PROJECT NUMBER

1004.05

SIGN TYPE	SHEET NO.
S11	26

KMA DESIGN
135 TECHNOLOGY DRIVE, SUITE 401 - CANONSBURG, PA 15317 VOICE 724.745.8601 FAX 724.745.8607 WWW.THEKMAGROUP.COM

©2010 KMA DESIGN

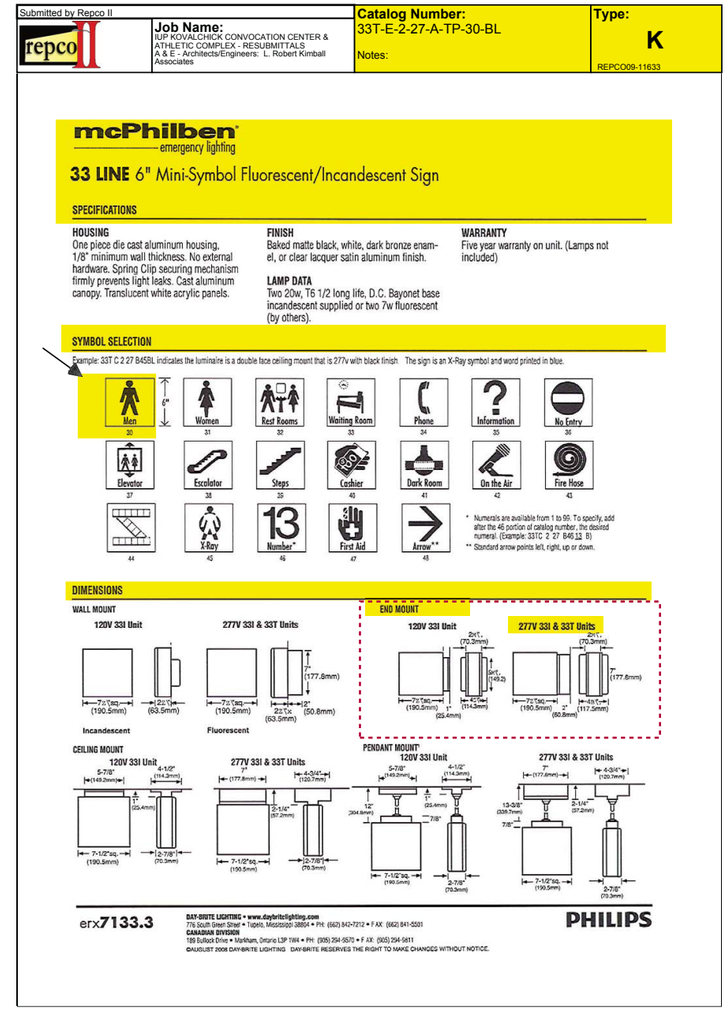

1 SIGN TYPE 14 - ILLUMINATED FLAG FACE REPLACEMENT
ELEVATION

SCALE: 1/2" = 1"

2 SIGN TYPE 14
CUT - SHEET

DRAWN BY	CHECKED BY
MICHAEL MARTIN	BARBARA MARTIN

ISSUED FOR / DATE

CONSTRUCTION DOCUMENTS 09-15-10

REVISION NUMBER

DRAWING TITLE

SIGN TYPE 14 - ILLUMINATED FLAG FACE REPLACEMENT

NOTES

USED FOR THE END MOUNT DETAILS

OWNER

INDIANA UNIVERSITY OF PENNSYLVANIA
INDIANA, PA

APPROVAL / DATE

___-___-___ _____

PROJECT NUMBER

1004.05

SIGN TYPE	SHEET NO.
14	27

KMA DESIGN
135 TECHNOLOGY DRIVE, SUITE 401 - CANONSBURG, PA 15317 VOICE 724.745.8601 FAX 724.745.8607 WWW.THEKMAGROUP.COM

©2010 KMA DESIGN

1 SIGN TYPE 27 - DOOR VINYL
ELEVATION

SCALE: 1/2" = 1"

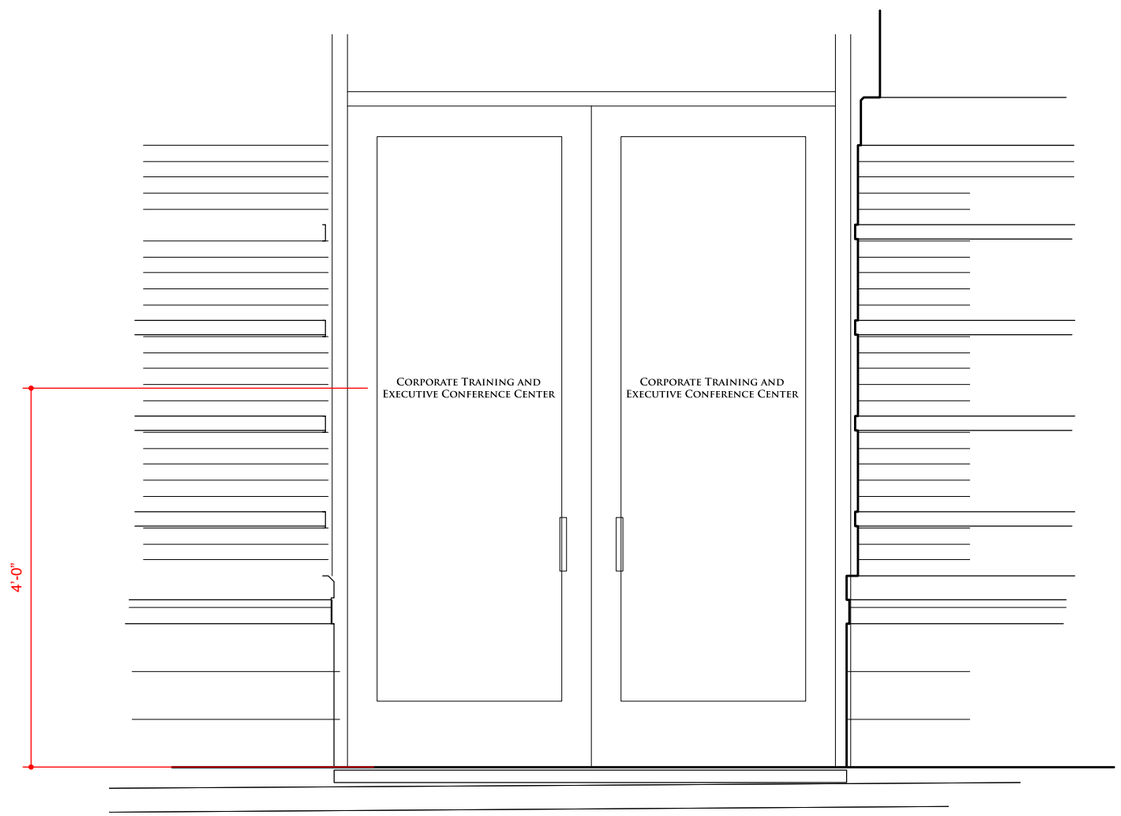

2 SIGN TYPE 27 - DOOR VINYL
ELEVATION

SCALE: 1/2" = 1"

DRAWN BY	CHECKED BY
MICHAEL MARTIN	BARBARA MARTIN

ISSUED FOR / DATE

CONSTRUCTION DOCUMENTS 09-15-10

REVISION NUMBER

DRAWING TITLE

SIGN TYPE 27 - DOOR VINYL

NOTES

SECOND SURFACE APPLICATION

OWNER

INDIANA UNIVERSITY OF PENNSYLVANIA
INDIANA, PA

APPROVAL / DATE

___-___-___ _____

PROJECT NUMBER

1004.05

SIGN TYPE	SHEET NO.
27	28

KMA DESIGN
135 TECHNOLOGY DRIVE, SUITE 401 - CANONSBURG, PA 15317 VOICE 724.745.8601 FAX 724.745.8607 WWW.THEKMAGROUP.COM

©2010 KMA DESIGN

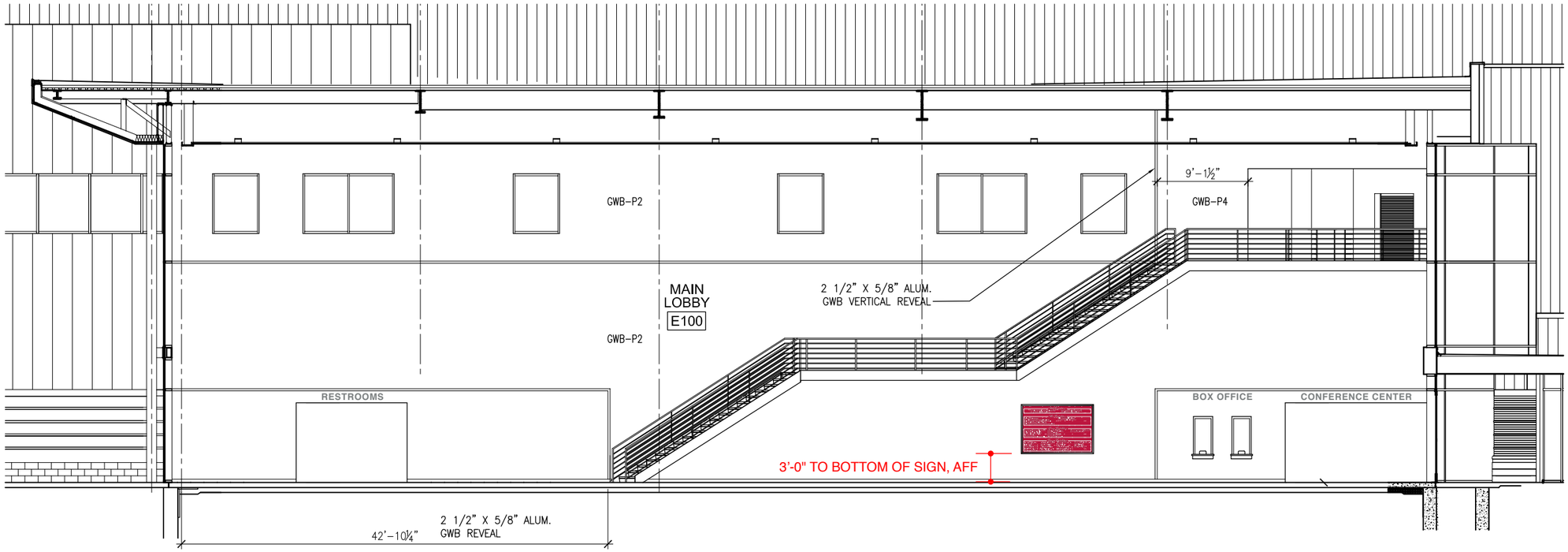

1 SIGN TYPE 16, 26
ELEVATION

SCALE: NTS

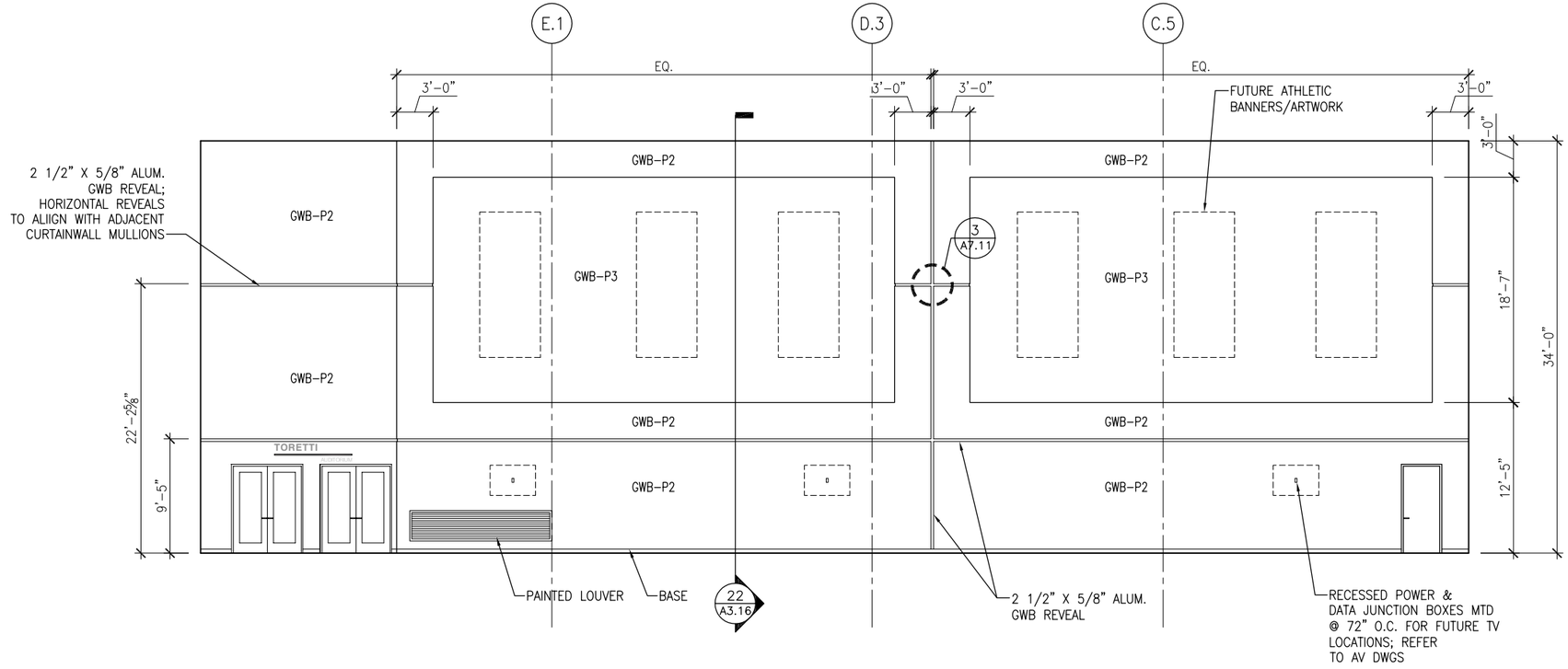

2 SIGN TYPE 13
ELEVATION

SCALE: NTS

DRAWN BY	CHECKED BY
MICHAEL MARTIN	BARBARA MARTIN

ISSUED FOR / DATE

CONSTRUCTION DOCUMENTS 09-15-10

REVISION NUMBER

DRAWING TITLE

ARCHITECTURAL ELEVATIONS - MAIN LOBBY

NOTES

OWNER

INDIANA UNIVERSITY OF PENNSYLVANIA
INDIANA, PA

APPROVAL / DATE

___-___-___

PROJECT NUMBER

1004.05

SIGN TYPE	SHEET NO.
13,16,26	29

KMA DESIGN
135 TECHNOLOGY DRIVE, SUITE 401 - CANONSBURG, PA 15317 VOICE 724.745.8601 FAX 724.745.8607 WWW.THEKMAGROUP.COM

©2010 KMA DESIGN

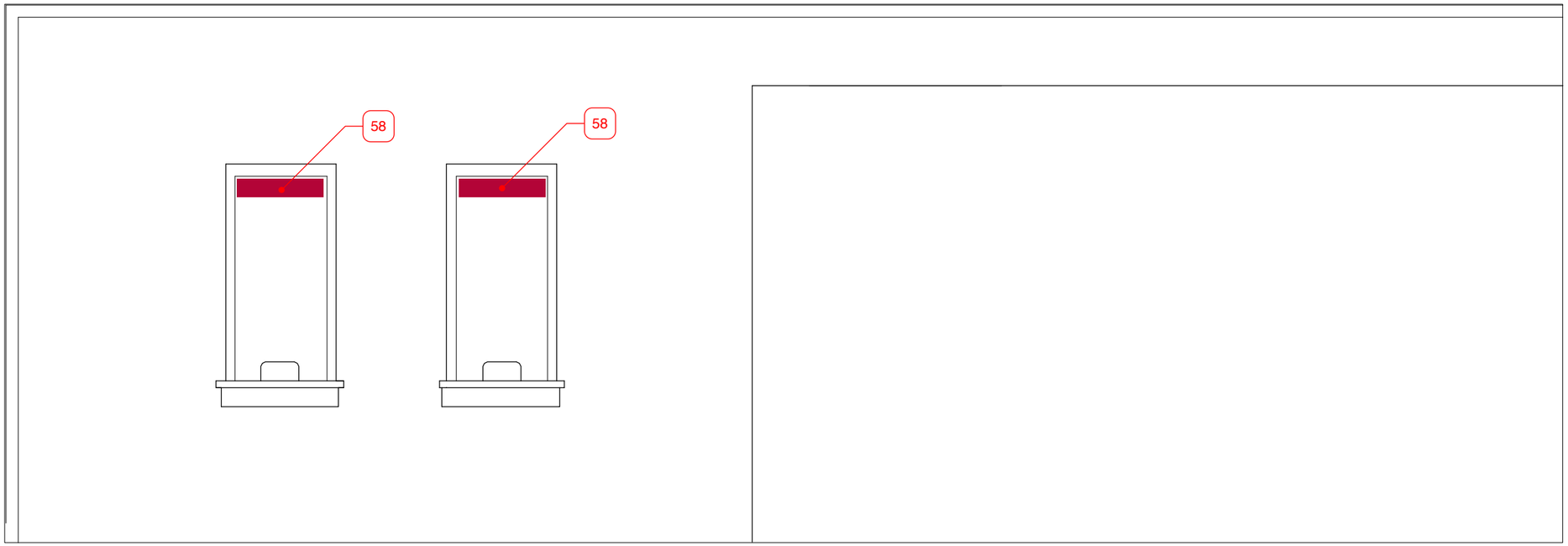

1 SIGN TYPE 21 - BOX OFFICE LED (MOUNTS INSIDE WINDOW - FIELD VERIFIED)
ELEVATION

SCALE: NTS

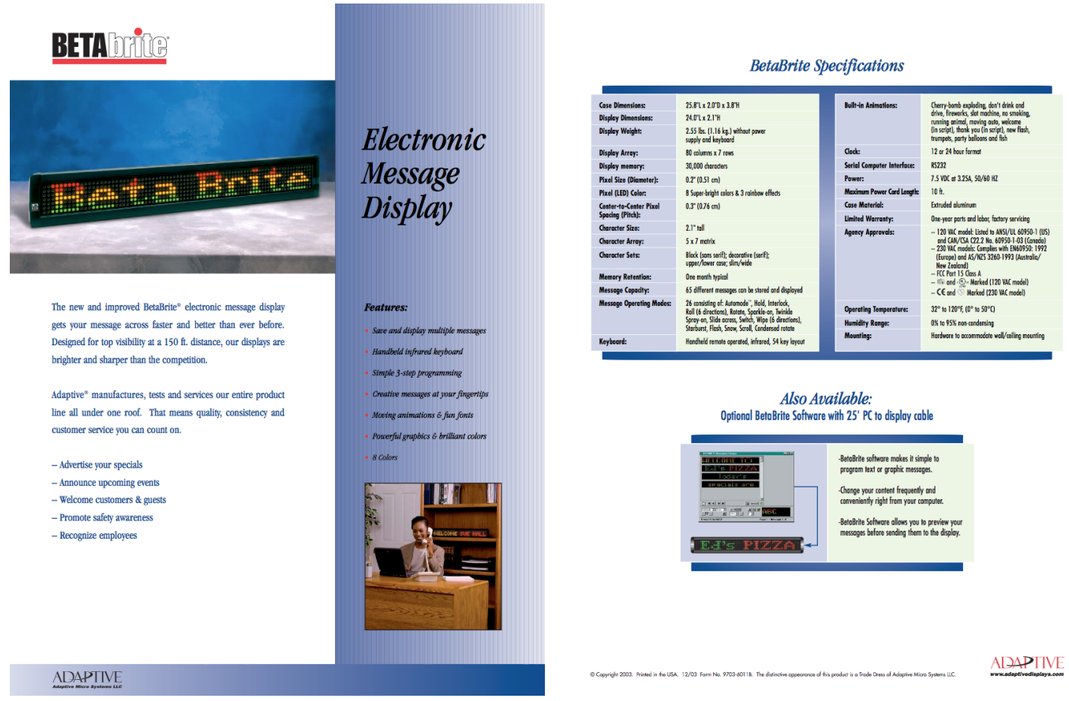

1 SIGN TYPE 21 - BOX OFFICE LED (MOUNTS INSIDE WINDOW - FIELD VERIFIED)
DETAILS

SCALE: NTS

DRAWN BY	CHECKED BY
MICHAEL MARTIN	BARBARA MARTIN

ISSUED FOR / DATE

CONSTRUCTION DOCUMENTS 09-15-10

REVISION NUMBER

DRAWING TITLE

BOX OFFICE LED

NOTES

OWNER

INDIANA UNIVERSITY OF PENNSYLVANIA
INDIANA, PA

APPROVAL / DATE

___-___-___

PROJECT NUMBER

1004.05

SIGN TYPE	SHEET NO.
21	30

KMA DESIGN
135 TECHNOLOGY DRIVE, SUITE 401 - CANONSBURG, PA 15317 VOICE 724.745.8601 FAX 724.745.8607 WWW.THEKMAGROUP.COM

©2010 KMA DESIGN